Project Manual
Clear Creek Park
Basketball Court

Prepared For:

LARAMIE COUNTY
PLANNING AND DEVELOPMENT OFFICE

Laramie County Recreation
Planning And Advisory Board

Prepared By:

AVI p.c.
1103 Old Town Lane, Ste. 101
Cheyenne, Wyoming 82009
307.637.6017

avi@avipc.com www.avipc.com

ENGINEERING
PLANNING
SURVEYING
PC

TABLE OF CONTENTS

Part I Advertisement (Notice To Bidders) 1
Part II Instructions To Bidders 1
Defined Terms 1
Copies of Bidding Documents 1
Qualifications of Bidders 1
Examination of Contract Documents and Site 1
Interpretations 1
Bid Security 2
Contract Time 2
Liquidated Damages 2
Substitute Material and Equipment 2
Bid Execution 2
Submission of Bids 3
Modification and Withdrawal of Bids 3
Opening of Bids 3
Bids to Remain Open 3
Award of Contract 3
Performance and Other Bonds 4
Signing of Agreement 4
Preference for State Labor and Materials 4
Certificate of Residency Status For In-State Preference 5
Part III Proposal 1
Itemized Bid Sheet 5
List of Subcontractors and Material Suppliers 7
Part IV Example Forms 1
Example of Bid Bond 1
Notice of Award 2
Notice to Proceed 3
Part V Agreement 1
Signature Page 8
Performance and Payment Bond Requirements 9
Corporate Principals Only: 10

Example of Performance and Payment Bond 11
Contractors Certification of Completion 13
Consent of Surety For Final Payment 14
Final Waiver of Lien 15
Affidavit of Release of Liens 17
Affidavit Of Payment 18
Contract Payment Request 19
Part VI General Conditions 1
Insurance Requirements 1
Indemnity 2
Nondiscrimination 2
Compliance With Laws 2
EEOC And ADA Compliance 2
Part VII Supplementary Conditions 1
Project Site 1
Time For Completion 1
Liquidated Damages 1
Contract Documents 1
Contractor's License 1
Job Offices And Staging Area 2
Partial Use Of Site Improvements 2
Project Record Documents 2
General Traffic Requirements 3
Existing Roadways 3
Project Observation 3
Final Cleanup 3
Samples, Test, Cited Specifications 4
Part VIII Supplementary Conditions 1
Special Provisions 1

Part I Advertisement (Notice To Bidders)

Notice is hereby given that Laramie County and the Laramie County Recreation Planning and Advisory Board will receive sealed bids at AVI p.c. 1103 Old Town Lane, Suite 101, Cheyenne, WY 82009 for the Clear Creek Park Basketball Court project until 3:00 p.m. on April 13th, 2023. The work is described in the plans, specifications and on the bid schedule, and consists of 9 basketball courts construction and other associated work at Clear Creek Park located at 251 Southwest Drive, Cheyenne, WY 82001.

The Clear Creek Park Basketball Court project consists of reinforced concrete flatwork, minor grading, landscape, irrigation modifications, hoop assembly erection, court striping, and surfacing.

This project is being partially funded with Federal ARPA funds (ALN #21.027).

Respondent will be required to be registered in Sam.gov to receive federal ARPA funding as a contractor/vendor for this project.

The contract bid documents, specifications and plans may be obtained from Laramie County's website https://www.laramiecountywy.gov

A non-mandatory pre bid conference will be held at 10:00 a.m. on April 6th, 2023, at AVI, 1103 Old Town Lane, Suite 101, Cheyenne, WY 82009 it is recommended that all bidders interested in this project attend the pre-bid conference. All bidding questions should be directed in writing to avi@avipc.com subject Line Clear Creek Park Basketball Court no later than 5:00 p.m., MST on April 10th, 2023.

Bids must be submitted on proposal forms provided and in accordance with the contract documents. The sealed bids must be marked on the outside of the envelope Clear Creek Park Basketball Court Bid opening at 3:00 p.m. on April 13th, 2023.

Laramie County reserves the right to reject any and all bids or schedules, and to waive irregularities and formalities, and to award the contract in whole or in part in the best interest of Laramie County.

Published: Friday March 17th,Friday March 24th, and Friday April 7th, 2023

Newspaper: Wyoming Tribune Eagle.

Part II Instructions To Bidders

DEFINED TERMS

a. Terms used in these instructions to Bidders have the meanings assigned to them in the General Conditions. The term "Successful Bidder" means the lowest qualified, responsive, and responsible Bidder to whom the Owner (based on Owner's evaluation as hereinafter provided) makes an award.

COPIES OF BIDDING DOCUMENTS

a. Complete sets of the Bidding Documents in the number and for the deposit sum, if any stated in the Advertisement of Invitation may be obtained from the Engineer.

b. Complete sets of Bidding Documents shall be used in preparing Bids; neither Owner nor Engineer assumes any responsibility for errors or misinterpretations resulting from the use of incomplete sets of Bidding Documents.

c. The Owner and Engineer, in making copies of Bidding Documents available on the above terms, do so only for the purpose of obtaining Bids on the Work and do not confer a license or grant for any other use.

QUALIFICATIONS OF BIDDERS

a. To demonstrate to the Owner the Bidder's qualifications to perform the Work, each Bidder may be asked to submit financial data, pervious experience, and evidence of authority to conduct business in the jurisdiction where the Project is located.

b. Bidders may bid all schedules of Work for which they are qualified.

EXAMINATION OF CONTRACT DOCUMENTS AND SITE

a. Before submitting a bid, each Bidder must (a) examine the Contract Documents thoroughly; (b) visit the site to become familiar with local conditions that may in any manner affect cost, progress, or performance of the Work; (c) become familiar with federal, state, and local laws, ordinances, rules, and regulations that may in any manner affect cost, progress, or performance of the Work; (d) study and carefully correlate Bidder's observations with the Contract Documents.

b. On request, Owner will provide each Bidder access to the site to conduct such investigations and tests as each Bidder deems necessary for submission of a Bid.

c. The submission of a Bid will constitute an incontrovertible representation by the Bidder that the Bidder has complied with every requirement of this and manual and that the Contract Documents are sufficient in scope and detail to indicate and convey understand of all terms and conditions before performance of the Work.

INTERPRETATIONS

a. Questions regarding the meaning or intent of the Contract Documents shall be submitted to the Engineer in writing to avi@avipc.com subject Line Clear Creek Park Basketball Court no later than 5:00 p.m., MST on April 10th, 2023, questions received after that time will not be answered. Replies will be issued by formal, written Addenda. Addenda will be mailed, faxed, emailed, or

delivered to all parties recorded by Engineer as having received the Bidding Documents; delivery method will be at the discretion of the Engineer. Only questions answered by formal, written Addenda will be binding. Oral and other interpretations or clarifications will be without legal effect.

BID SECURITY

a. Bid Security shall be made payable to Owner, in an amount of not less than five percent (5%) of the Bidder's maximum Bid price and in the form of a certified or bank check or a Bid Bond issued by a surety, meeting the requirements of the General Conditions.

b. The Bid Security of the Successful Bidder will be retained until such Bidder has executed the Agreement and furnished the required Contract Security, whereupon it will be returned; if the successful Bidder fails to execute and deliver the Agreement and furnish the required Contract Security within fifteen (15) days of the Notice of Award, Owner may annul the Notice of Award and the Bid Security of that Bidder will be forfeited. The Bid Security of any Bidder whom Owner believes to have a reasonable chance of receiving the Award may be retained by Owner until the seventh (7th) day after the signing of the Notice to Proceed by Owner to Contractor and the required Contract Security is furnished. Bid Security of the other Bidder's will be returned within seven (7) days of the Bid Opening.

CONTRACT TIME

a. The Work must be completed by the dates specified in the Agreement.

b. A preliminary schedule for the work shall be included with the bid submittal. This schedule shall include, but not be limited to, all major components of the Work.

LIQUIDATED DAMAGES

a. Provisions for liquidated damages, if any, are set forth in the Agreement.

SUBSTITUTE MATERIAL AND EQUIPMENT

a. The Contract, if awarded, will be on the basis of material and equipment described in the Drawings or specified in the Specifications without consideration of possible substitute or "or-equal" items. Whenever it is indicated in the Drawings or specified in the Specifications that a substitute or "or-equal" item of material or equipment may be furnished or used by the Contractor if acceptable to the Engineer, application for such acceptance will not be considered by the Engineer until after the signing of the Notice to Proceed. The procedure for submittal of any such application by the Contractor and consideration by the Engineer is set forth in the General Conditions.

BID EXECUTION

a. Bids by corporations must be executed in the corporate name by the president or a vice-president, or other corporate officer accompanied by evidence of authority to sign bids on behalf of the corporation, and the corporate seal must be affixed and attested by the secretary or an assistant secretary. The corporate address and state of incorporation shall be shown below the signature.

b. Bids by partnership must be executed in the partnership name and signed by a partner, whose title must appear under the signature, and the official address of the partnership must be shown below the signature.

c. All names must be typed or printed below the signature.

d. The Bid shall contain an acknowledgement of receipt of all Addenda (the numbers of which shall be filled in on the Bid form).

e. The address to which communications regarding the Bid are to be directed must be shown.

SUBMISSION OF BIDS

a. Bids shall be submitted by the time and at the place indicated in the Invitation to Bid and shall be included in an opaque sealed envelope, marked with the project title and name and address of the Bidder, and accompanied by the Bid Security and other required documents. If the Bid is sent through the mail or other delivery system, the sealed envelope shall be enclosed in a separate envelope with the notation "BID ENCLOSED" on the face thereof.

- Late Bids Will Not Be Considered.
- Bids Must Be Signed. Unsigned Bids Will Not Be Considered.
- Bids Must Include a List of All Subcontractors and Suppliers.

MODIFICATION AND WITHDRAWAL OF BIDS

a. Bids may be modified or withdrawn prior to 3:00 p.m. April 13th, 2023 and appropriate document duly executed (in the manner that a Bid must be executed) and delivered to the place where Bids are to be submitted at any time prior to the opening of Bids.

b. If within twenty-four (24) hours after Bids are opened, and Bidder files a duly signed written notice with Owners and promptly thereafter demonstrates to the reasonable satisfaction of Owners that there was a material and substantial mistake in the preparation of the Bid, that Bidder may withdraw the Bid and Bid Security will be returned. Thereafter, that Bidder will be disqualified from further bidding on this Work.

OPENING OF BIDS

a. Bids will be opened publicly. They will be read aloud and an abstract of the amounts of the base Bids and major alternates, if any, will be made available after the opening of the Bids.

BIDS TO REMAIN OPEN

a. Bids shall remain open for sixty (60) days after the day of the Bid Opening, but Owner may, in Owner's sole discretion, release any bid and return the Bid Security prior to that date.

AWARD OF CONTRACT

a. Owner reserves the right to reject any and all Bids or Schedules, waive any and all formalities and to negotiate contract terms with the Successful Bidder or Bidders, and to disregard nonconforming, non-responsive or conditional Bids.

b. In evaluating Bids, Owner shall consider the qualifications of the Bidders, whether or not the Bids comply with the prescribed requirements, and alternates and unit prices requested in the Bid

forms. The Owner will consider alternates in terms of the best interest of the overall project. Bidders may submit bids for the base bid, the alternate bid or both.

c. Owner may conduct such investigation, as the Owner deems necessary to assist in the evaluation of any Bid and to establish the responsibility, qualifications, and financial ability of the Bidders, proposed Subcontractors and other persons and organization to do the Work in accordance with the Contract Documents to Owners satisfaction within the prescribed time.

d. Owner reserves the right to reject the Bid of any Bidder who does not pass such evaluation to Owners Satisfaction.

e. If the contract is to be awarded, it will be awarded to the lowest bidder whose evaluation by Owner indicates to Owner that the award will be in the best interest of the Project.

f. If a contract is to be awarded, Owner will give the Successful Bidder a Notice of Award within thirty (30) days after the day of the Bid Opening.

PERFORMANCE AND OTHER BONDS

a. Refer to Part V for Owner's requirements as to performance and other bonds. When the Successful Bidder delivers the executed Agreement to Owner, the executed Agreement shall be accompanied by the required Contract Security.

SIGNING OF AGREEMENT

a. When Owner gives a Notice of Award to the Successful Bidder, it will be accompanied by at least three (3) unsigned counterparts of the Agreement and all other Contract Documents. Within fifteen (15) days, thereafter Contractor shall sign and deliver at least three (3) counterparts of the Agreement to Owner with all other Contract Documents attached. The Owner will complete their portion of the three counterparts of the Agreement at the next regularly scheduled meeting of the County Commissioners and return, soon after, one copy set to the Contractor and one set to the Engineer.

PREFERENCE FOR STATE LABOR AND MATERIALS

a. Pursuant to W.S.§ 16-6-104, Wyoming made materials and products, and Wyoming suppliers of products and materials of equal quality and desirability shall have preference over materials or products produced or supplied outside the state and any contract let shall so provide. The preference created by W.S.§ 16-6-104 shall be applied in a manner identical to the preference for resident contractors in W.S.§ 16-6-102.

b. Pursuant to W.S.§ 16-6-102, the contract shall be awarded to the responsible certified resident making the lowest responsive bid if the certified resident's bid is not more than five percent (5%) higher than that of the lowest responsible nonresident bidder.

c. Pursuant to W.S.§ 16-6-103, a successful resident bidder shall not subcontract more than thirty percent (30%) of the work covered by the contract to nonresident contractors.

d. Pursuant to W.S.§ 16-6-106, preference is hereby given to materials, supplies, agricultural products, equipment, machinery, and provisions produced, manufactured, or grown in Wyoming, or supplied by a resident of the state, quality being equal to articles offered by the competitors outside of the state.

e. Pursuant to W.S.§ 16-6-107, the structure or structures to be constructed pursuant to this invitation to bidders shall be constructed and maintained by materials produced or manufactured in Wyoming if Wyoming materials are suitable and can be furnished in marketable quantities. Preference shall not be granted for materials of an inferior quality to those offered by competitors outside of the state, but a differential of not to exceed five percent (5%) may be allowed in cost of contracts less than five million dollars ($5,000,000.00) for the Wyoming materials of equal quality as against materials from states having or enforcing a preference rule against "out-of-state" products.

f. Pursuant to W.S.§ 16-6-203, the successful bidder shall employ only Wyoming laborers on the project and the contract to be awarded to the successful bidder shall contain a provision requiring that Wyoming labor be used except other laborers may be used when Wyoming laborers are not available for the employment from within the state or are not qualified to perform the work involved. In addition, the contract shall contain a provision requiring specific acknowledgement of the requirements of this section. The successful bidder may employ other than Wyoming laborers if:

   i. The successful bidder informs the nearest state workforce center of his employment needs at least eleven (11) days before work is commenced; and

   ii. The state workforce center certifies that the bidder's need for laborers cannot be filled from those Wyoming laborers listed with the Wyoming department of workforce services. The department shall respond to a bidder's request for certification within ten (10) days of the date the information is filed.

   iii. The successful bidder shall also agree to promptly respond to requests from the Wyoming department of workforce services for the most recent construction schedule for the project.

CERTIFICATE OF RESIDENCY STATUS FOR IN-STATE PREFERENCE

a. Wyoming Contractors desiring residency status for the purpose of obtaining the five percent (5%) preference for resident bidders on public works projects must be so certified by the State of Wyoming Department of Employment. No bidder may be considered a resident for the purpose of the five percent (5%) preference unless his residency has been certified as provided in Wyoming Statute § 16-6-101.

b. The contractor shall abide by W.S.§ 39-15-101 et seq. , and W.S.§ 39-16-101 et seq., relating to Sales and Use Taxes. In particular, the contractor shall abide by the guidance provided in State of Wyoming, Department of Revenue, Bulletin # 21, "Use Tax and You" issued December 5, 2012. Bulletin # 21 is available on-line through the Wyoming Department of Revenue's website.

Part III Proposal

CLEAR CREEK PARK BASKETBALL COURT

BIDS CLOSE 3:00 P.M. MST ON APRIL 13th, 2023.

This Bid is submitted to:
Laramie County Grants Office
Sandra Newland, Grants Manager
309 W. 20th Street, Suite 3100
Cheyenne, Wyoming 82001

The undersigned Bidder proposes and, if this Bid is accepted, agrees to enter into an Agreement with Owner in the form included in the Contract Documents, to complete all Work as specified or indicated in the Contract Documents for the Contract Price and within the Contract Time indicated in this Bid an in accordance with the Contract Documents.

Bidder accepts all of the terms and condition of the Instructions to Bidders, including without limitation those dealing with the disposition of Bid Security. This Bid will remain open for sixty (60) days after the day of Bid Opening. Bidder will sign the Agreement and submit the Contract Security and other documents required by the Contract Documents within fifteen (15) days after the date of the Owner's Notice of Award.

In submitting this Bid, Bidder represents, as more fully set forth in the Agreement, that:

a. Bidder has examined copies of all Contract Documents and of the following addenda: (if none, so state)

Date	Number
_____	_____
_____	_____

(Receipt of all of which is hereby acknowledged) and also copies of the Advertisement or Invitation to Bid and the Instructions to Bidders.

b. Bidder has examined the site and locality where the Work is to be performed, the legal requirements (federal, state, and local laws, ordinances, rules, and regulations) and the conditions affecting costs, progress, or performance of the Work and has made such independent investigations as Bidder deems necessary.

c. The Bid is genuine and not made in the interest of or on behalf of any undisclosed person, firm or corporation and is not submitted in conformity with any agreement or rules of any group, association, organization, or corporation; Bidder has not directly or indirectly induced or solicited any other Bidder to submit a false or sham Bid; Bidder has not solicited or induced any person, firm or a corporation to refrain from bidding; and Bidder has not sought by collusion to obtain any advantage over any other Bidder or over Owner.

Bidder will complete the Work in accordance with the following Proposal Schedules. It is understood that the Owner has the right to reject any and all bids, also that the Owner may accept any or all Proposal Schedules. The Owners reserves the right to reject any and all bids, also that the Owner may accept any or all Proposal Schedules. The Owner reserves the right to reduce quantities or eliminate items listed on the bid schedule in order for the project to meet the budget. The Owner reserves the right to increase or decrease the limits and/or scope of the project to better utilize allocated funds.

Bidder agrees that the Work will be substantially completed on, or before the dates or within the number of working days indicated in the Agreement.

Bidder accepts the provisions of the Agreement as to Liquidated Damages in the event of failure to complete the Work on time.

The following is a list of documents that are included with and made a condition of this Bid:

a. The bid proposal completed and signed including acknowledgement of all addenda, if any.
b. Required Bid Security in the form of a signed Bid Bond, certified check, or cashier's check in the amount of not less than five percent (5%) of the total sum bid for all schedules.
c. Signed itemized bid sheet.
d. A List of all Subcontractors and suppliers
e. Communications concerning this bid shall be addressed to the address of Bidder.

SUBMITTED THIS _____DAY OF _____, 2023

(Bidder must sign in appropriate block below; UNSIGNED BIDS WILL NOT BE ACCEPTED).

A SOLE PROPRIETORSHIP

By: _____

Doing Business as: _____

Business Address: _____

Telephone Number: _____

A PARTNERSHIP

_____
(Firm Name)

By: _____
(General Partner)

Business Address: _____

Telephone Number: _____

A CORPORATION

_____
(Corporation Name)

_____
(State of Incorporation)

By: _____
(Name of Person Authorized to Sign)

_____ Attest: _____
(Title) (Secretary)

Business Address: _____

(Corporate Seal)

Telephone Number: _____

A JOINT VENTURE

By: _____

Address:_____

By: _____

Address:_____

By: _____

Address:_____

(Each party to the joint venture must sign. The manner of signing for each individual, partnership, and corporation that is a party to the joint venture should be in the manner indicated above.)

ITEMIZED BID SHEET

Clear Creek Park Basketball Court

1020.00	BONDS AND INSURANCE	1	LS		
1020.01	CONTRACTOR TESTING	1	LS		
1020.02	CONSTRUCTION STAKING (OWNER PROVIDED)	1	LS		
1030.00	MOBILIZATION	1	LS		
1035.00	FORCE ACCOUNT	1	LS	$8,000.00	$8,000.00
2210.00	EARTHWORK (INCLUDING TOPSOIL STRIPPING, STORING & PLACING)	1	LS		
2231.00	CRUSHED BASE - GRADING 'W' - 6"	445	SY		
2900.00	LANDSCAPING - SOD DISTURBED AREAS	3,994	SF		
3340.00	CONCRETE PAVEMENT - 4" (REINFORCED)	445	SY		
6800.00	IRRIGATION ADJUSTMENT	1	LS		
6810.00	BASKETBALL COURT SURFACING (ALL FINISHING LAYERS)	1	LS		
6820.00	BASKETBALL COURT MARKINGS	1	LS		
6830.00	BASKETBALL HOOP ASSEMBLY	2	EA		
				BASE BID TOTAL	

2231.01	CRUSHED BASE - GRADING 'W' - 4"	72	SY		
3340.01	CONCRETE SIDEWALK - 4"	72	SY		
				ALTERNATE #1 TOTAL	

2231.01	CRUSHED BASE - GRADING 'W' - 4"	33	SY		
3340.00	CONCRETE PAVEMENT - 4"	11	SY		
3340.01	CONCRETE SIDEWALK - 4"	22	SY		
6840.00	8' POLYVINYL COATED METAL PICNIC TABLE	1	EA		
				ALTERNATE #2 TOTAL	

2231.00	CRUSHED BASE - GRADING 'W' - 6"	242	SY		
2231.01	CRUSHED BASE - GRADING 'W' - 4"	24	SY		
2900.00	LANDSCAPING - SOD DISTURBED AREAS	1,278	SF		
3340.00	CONCRETE PAVEMENT - 4" (REINFORCED)	242	SY		
3340.00	CONCRETE PAVEMENT - 4"	14	SY		
3340.01	CONCRETE SIDEWALK - 4"	10	SY		
6840.00	8' POLYVINYL COATED METAL PICNIC TABLE	1	EA		
6850.00	PICKLEBALL COURT SURFACING (ALL FINISHING LAYERS)	1	LS		
6860.00	PICKLEBALL COURT MARKINGS	1	LS		
6870.00	PICKLEBALL NET ASSEMBLY	1	LS		
6880.00	10'H VINYL COATED CHAIN LINK FENCE	196	LF		
6890.00	4'W CHAIN LINK FENCE GATE	1	EA		
				ALTERNATE #3 TOTAL	

Base Bid	Base Bid - Subtotal
Alternate #1	Alternate #1 - Subtotal
Alternate #2	Alternate #2 - Subtotal
Alternate #3	Alternate #3 - Subtotal

Base Bid Total Written.

$_____.

Dated this _____ day of _____, _____
(Month) (Year)

FIRM NAME: _____

BIDDER'S
ADDRESS_____

Telephone
Number_____

Email
Address_____

By_____
(Print Name) **(Bidder's Signature)**

Title_____Date: _____

<u>Witness</u>

By_____
(Print Name) **(Signature)**

Title_____Date: _____

LIST OF SUBCONTRACTORS AND MATERIAL SUPPLIERS

WORK	SUBCONTRACTOR OR MATERIAL SUPPLIER	CITY/STATE	% OF WORK

Note: A list of Subcontractors and material suppliers proposed for this project shall be completed and submitted with the bid.

Part IV Example Forms

EXAMPLE OF BID BOND

Project: CLEAR CREEK PARK BASKETBALL COURT

KNOW ALL MEN BY THESE PRESENTS,

that_____, as Bidder, and, _____, as Surety, a corporation duly organized under the laws of the State of _____ and authorized to do business within the State of Wyoming, are held and firmly bound unto Laramie County, Wyoming, in the full and just sum of _____ ($_____), lawful money of the United States, for the payment of which sum, well and truly to be made, we bind ourselves, our heirs, executors, administrators, successors, and assigns, jointly and severally, firmly by these presents.

WHEREAS, said Principal is here within submitting a Proposal for the Clear Creek Park Basketball Court, and Laramie County, Wyoming, has required as a condition for submitting said Proposal, that said Principal deposit specified Bid Security in an amount not less than five percent (5%) of the amount of said Proposal, conditioned that in event of failure of Principal to execute the Contract and furnish the required performance and payment bonds if the Contract is awarded to said principal, that said sum be paid immediately to Laramie County, Wyoming as liquidated damages, and not as penalty, for the Principal's failure to perform.

The condition of this obligation is such that if the aforesaid Principal will, within the time required, enter into a formal contract, and give such bonds as are specified in the bidding documents with surety acceptable to Laramie County; or if Principal shall fail to do so, pay to Laramie County the sum determined herein as liquidated damages and not as a penalty, then this obligation shall be void; otherwise it shall remain in full force and effect.

IN WITNESS WHEREOF, the above bonded partied have executed this instrument under their several seals this _____ day of _____2023.

BIDDER	**SURETY**
_____(Seal)	_____ (Seal)
By: _____	By: _____
Signature and Title	Signature and Title (Attach Power of Attorney)
Attest: _____	Attest: _____
Signature and Title	Signature and Title

NOTICE OF AWARD

Date: _____

To: _____

Attn: _____

Dear _____

Laramie County, having duly considered the proposals submitted on _____, 2023, for the construction of the Clear Creek Park Basketball Court as outlined in the Contract Documents, and it appears that your Proposal for performing the work outlined is fair, equitable, and in the best interest of the County, the bid items are hereby accepted at the bid prices contained therein.

In accordance with the terms of the Contract Documents, you are required to execute the formal Agreement and furnish the required Performance and Payment Bonds within fifteen (15) consecutive calendar days from and including the date of this Notice.

In addition, you are required to furnish at the same time a copy of Certificate of Insurance evidencing compliance with the requirements for insurance state in the Contract Documents and a copy of your Worker's Compensation Certificate.

The Bid Guarantee submitted with your proposal will be retained until the Agreement has been executed and the required Performance and Payment Bonds have been furnished and approved. In the event that you should fail to execute the Contract and furnish the Performance and Payment Bonds within the time limit specified, the said Bid Security will be retained as liquidated damages and not as penalty for the delay and extra work caused thereby.

LARAMIE COUNTY

By: _____

Title: _____

Enclosures:

- Agreement (2 copies)
- Contract Documents (2 copies)

NOTICE TO PROCEED

Date: _____

To: _____

You are hereby authorized to proceed on this date _____, 2023, with the construction of Clear Creek Park Basketball Court, as set forth in the Contract Documents.

LARAMIE COUNTY

By: _____

Title: _____

The Contract is required to return an acknowledged copy of this Notice to Laramie County Grants Department.

Acknowledged:

_____
Contractor

By: _____

Title: _____

Date:_____

Part V Agreement

THIS AGREEMENT is dated this _____day of _____, 2023 and between Laramie County (hereinafter called Owner) and _____, (hereinafter called Contractor).

Owner and Contractor, in consideration of the mutual covenants hereinafter set forth, agree as follows:

Article 1. WORK

1.1 The project for which the Work under the Contract Documents is generally described is as follows:

Clear Creek Park Basketball Court_____

Article 2. ENGINEER

AVI pc
1103 Old Town Lane, Suite 101
Cheyenne, Wyoming 82009
(307) 637-6017
Tristan Cordier, PE
tcordier@avipc.com

Hereinafter called Engineer, will assume all duties and responsibilities, and will have the rights and authority assigned to Engineer in the Contract Documents in connection with completion of the Work in accordance with the Contract Documents.

Article 3. CONTRACT TIME

3.1 The Work will be substantially completed and ready for final payment in accordance with the General Conditions by **August 11, 2023**.

3.2 Liquated Damages. Owner and Contractor recognize that time is of the essence of this Agreement and that Owner will suffer financial loss if Work is not substantially complete within the time specified in paragraph Article 3. Above, plus any extensions thereof allowed in accordance with the General Conditions. The parties also recognize the delays, expense, and difficulties involved in proving in a legal or arbitration preceding the actual loss suffered by Owner if the Work is not substantially complete on time. Accordingly, instead of requiring any such proof, Owners and Contractor agree that as Liquidated Damages for delay (but not as a penalty) Contractor shall pay Owner an amount based on the original contract amount as specified in the Supplemental Conditions, for each calendar day that expires after the time specified in Part VII Liquidated Damages for substantial completion until the Work is Substantially complete.

Article 4. CONTRACT PRICE

4.1 Owner shall pay Contractor for performance of the Work in accordance with the Contract Documents, the prices bid for the unit or lump sum items as set forth in the conformed copy of the Proposal Schedule hereto attached, which prices shall conform to those in

accepted Contractors Proposal on file in the office of the Owner. Monthly and final payments shall be made as provided in the General Conditions. All payments shall be in accordance with W.S. 16-6-602 (as amended).

4.2 Whenever any portion of the Work is to be performed for Contractor by a Subcontractor, Contractor shall have identified in writing, and given to Owner prior to the Notice of Award, those portions of the Work that Contractor proposes to subcontract. After the Notice of Award, Contractor may only subcontract portions of the Work with Owners written consent.

Article 5. CHANGES IN THE WORK

5.1 The amount of any increase or decrease in the Contractors Fee, which results from a Change Order, shall be set forth in the applicable Change Order. No increase or decreases in the Contractors Fee will be allowed without an approved Change Order.

Article 6. PAYMENT PROCEDURES

6.1 Contractor shall submit Applications for Payment in accordance with the General Conditions. The Applications for Payment will indicate the amount of the Contractors Fee then payable. Applications for payment will be processed by Engineer as provided in the General Conditions.

6.2 Progress Payments. Owner shall make progress payments on account of the Contract Price on the basis of Contractors Applications of Payment as recommended by Engineer. All such payments shall be subject to the limitations of the Proposal Schedule.

6.3 All such payments will be on the basis of the progress of the Work measured by the Schedule of values provided for in the General Conditions.

6.4 Payments prior to Final Payment shall be in an amount equal to 90% of such fee earned to the date of the approved Application for Payment (less in each case payments previously made on account of such fee) based on the progress of the Work measured by the schedule of values provided for in the General Conditions.

6.5 Final Payment. Upon final completion and acceptance of the Work in accordance with the General Conditions, the Owner shall pay the remainder of the Contract Price as recommended by Engineer as provided in said paragraph.

Article 7. CONTRACTORS REPRESENTATIONS

7.1 In order to induce Owner to enter into this Agreement, the Contractor makes the following representations:

7.2 Contractor has become familiar with the nature and extent of the Contract Documents, work locality, and with the local conditions and federal, state, and local laws, ordinances, rules, and regulations that in any manner may affect cost, progress, or performance of the Work.

7.3 Contractor has given Engineer written notice of all conflicts, errors, or discrepancies that Contractor has discovered in the Contract Documents and the written resolution thereof by Engineer is acceptable to Contractor.

Article 8. ACCOUNTING RECORDS

8.1 Contractor shall check all materials, equipment and labor entering into the Work and shall keep such full and detailed accounts as may be necessary for proper financial management under this Agreement, and the accounting methods shall be satisfactory to Owner. Contractor shall preserve all such documents for a period of three (3) years after the final payment by Owner.

Article 9. CONTRACT DOCUMENTS

The Contract Documents, which comprise the Agreement between Owner and Contractor, are attached to this Agreement, made a part hereof and consist of the following:

9.1 This Agreement (Pages V-I through V-40 inclusive)

9.2 Performance and other Bonds

9.3 Notice of Award

9.4 City of Cheyenne and Board of Public Utilities Construction Specifications and Standard Drawings 2014.

9.5 General Conditions (Pages VI-41 through VII-80 inclusive)

9.6 Improvement Plans

9.7 Any addenda to the Notice of Bidders

9.8 Any modifications, including change orders, duly delivered after execution of this Agreement.

9.9 There are no Contract Documents other than those listed above in this Article 9. The Contract Documents may be altered, amended, or repealed only by a Modification (as defined in the General Conditions).

Article 10. MISCELLANEOUS

10.1 Terms used in this Agreement, which are defined in the General Conditions, shall have the meanings indicated in the General Conditions.

10.2 No assignment by a party hereto of any rights under or interests in the Contract Documents will be binding on another party hereto without the written consent of the party sought to be bound; and specifically but without limitation, moneys that may become due and moneys that are due may not be assigned without such consent (except to the extent that the effect of this restriction may be limited by the law), and unless specifically stated to the contrary in any written consent to an assignment no assignment will release or discharge the assignor form any duet or responsibility under the Contract Documents.

10.3 Owner and Contractor each bind themselves their partners, successors, assigns, and legal representatives to the other party hereto, and the partners, successors, assigns and legal representatives of the other party, in respect to all covenants, agreements, and obligations contained in the Contract Documents.

10.4 Retention of Records: Contractor agrees to retain all required records for three (3) years after Owner makes final payment and all other matters relating to the Agreement are concluded. Contractor agrees to permit access by the Owner or any of its duly authorized representatives to any books, documents, papers, and records of the Contractor which are directly pertinent to this specific Agreement for purposes including but not limited to audit, examination, excerpts, and transcriptions. It is agreed that finished or unfinished documents, data, or reports, prepared by Contractor under this contract shall be considered the property of the Owner and upon completion of the services to be performed or upon termination of this Agreement for cause, or for the convenience of the Owner, will be turned over to the Owner.

10.5 Independent Contractor: The services to be performed by Contractor are those of an independent contractor and not as an employee of Owner. Contractor is not eligible for Laramie County Employee benefits and will be treated as an independent contractor for federal tax filing purposes. Contractor assumes responsibility for its personnel who provide services pursuant to this contract, will make all deductions required of employers by state, federal and local laws, and shall maintain liability insurance for each of them. Contractor is free to perform the same or similar services for others.

10.6 Acceptance Not Waiver: Owner approval of the reports, and work or materials furnished hereunder shall not in any way relieve Contractor of responsibility for the technical accuracy of the Work. Owner approval or acceptance of, or payment for, any of the services shall not be construed to operate as a waiver of any rights under this Agreement or of any cause of action arising out of the performance of this Agreement.

10.7 Invalidity: If any provision of this Agreement is held invalid or unenforceable by any court of competent jurisdiction, or if the Owner is advised of any such actual or potential invalidity or unenforceability, such holding, or advice shall not invalidate or render unenforceable any other provision hereof. It is the express intent of the parties that the provisions of this Agreement are fully severable.

10.8 Applicable Law and Venue: The parties mutually understand and agree this Agreement shall be governed by and interpreted pursuant to the laws of the State of Wyoming. If any dispute arises between the parties from or concerning this Agreement or the subject matter hereof, any suit or proceeding at law or in equity shall be brought in the District Court of the State of Wyoming, First Judicial District, sitting at Cheyenne, Wyoming. The foregoing provisions of this paragraph are agreed by the parties to be a material inducement to Contractor and to Owner in executing this Agreement. This provision is not intended, nor shall it be construed to waive Owner's governmental immunity as provided in this Agreement.

10.9 Contingencies: CONTRACTOR certifies and warrants no gratuities, kick-backs or contingency fees were paid in connection with this Agreement, nor were any fees, commissions, gifts, or other considerations made contingent upon the award of this Agreement.

10.10 Non-Discrimination: The Contractor shall comply with the Civil Rights Act of 1964, the Wyoming Fair Employment Practices Act (Wyoming Statute § 27-9-105 et seq.), the

Americans with Disabilities Act (ADA), 42 U.S.C. § 12101, et seq., and the Age Discrimination Act of 1975 and/or any properly promulgated rules and regulations, thereto and shall not discriminate against any individual on the grounds of age, sex, color, races, religions, national origin, or disability in connection with the performance under this Agreement.

10.11 ADA Compliance: All parties agree they will not discriminate against a qualified individual with disability, pursuant to law as set forth in the Americans With Disabilities Act, P.L. 101-336, 42 U.S.C. § 12101, et seq., and/or any properly promulgated rules and regulations relating thereto.

10.12 Governmental/Sovereign Immunity: Owner does not waive its Governmental/ Sovereign Immunity, as provided by any applicable law including W.S. § 1-39-101 et seq., by entering into this Agreement. Further, Owner fully retains all immunities and defenses provided by law with regard to any action, whether in tort, contract, or any other theory of law, based on this Agreement.

10.13 Third Parties: The parties do not intend to create in any other individual or entity the status of third party beneficiary, and this Agreement shall not be construed so as to create such status. The rights, duties and obligations contained in this Agreement shall operate only between the parties to the Agreement, and shall inure solely to the benefit of the parties to this Agreement.

10.14 Conflict of Interest: Owner and Contractor affirm, to their knowledge, no Contractor employee has any personal beneficial interest whatsoever in the agreement described herein. No staff member of Contractor, compensated either partially or wholly with funds from this Agreement, shall engage in any conduct or activity, which would constitute a conflict of interest relative to this Agreement.

10.15 Force Majeure: Neither party shall be liable to perform under this Agreement if such failure arises out of causes beyond control, and without the fault or the negligence of said party. Such causes may include, but are not restricted to, Act of God or the public enemy, fires, floods, epidemics, quarantine restrictions, freight embargoes, and unusually severe weather. In every case, however, a failure to perform must be beyond the control and without the fault or the negligence of said party.

10.16 Limitation on Payment: Owner's payment obligation is conditioned upon the availability of funds which are appropriated or allocated for the payment of this obligation. If funds are not allocated and available for the continuance of the services and equipment provided by Contractor, the Agreement may be terminated by Owner at the end of the period for which funds are available. Owner shall notify Contractor at the earliest possible time of the services which will or may be affected by a shortage of funds. At the earliest possible time means at least thirty (30) days before the shortage will affect payment of claims if Owner knows of the shortage at least thirty (30) days in advance. No penalty shall accrue to Owner in the event this provision is exercised, and Owner shall not be obligated or liable for any future payments due or for any damages as a result of termination under this provision. This provision shall not be interpreted or construed to

permit Owner to terminate this Agreement in order to acquire similar services from another party.

10.17 Notices: All notices required and permitted under this Agreement shall be deemed to have been given, if and when deposited in the U.S. Mail, properly stamped, and addressed to the party for who intended at such parties' address listed herein or when personally delivered personally to such party. A party may change its address for notice hereunder by giving written notice to the other party.

10.18 Compliance with Law: Contractor shall comply with all applicable laws, regulations, and ordinances, whether Federal, State or Local.

10.19 Indemnification: To the fullest extent permitted by law, Contractor agrees to indemnify and hold harmless Owner, its elected and appointed officials, employees and volunteers from any and all liability for injuries, damages, claims, penalties, actions, demands, and expenses to the extend they are caused by the Contractors negligence, errors or omissions in connection with work performed by or on behalf of Contractor for Owner except to the extent liability is caused by the sole negligence or willful misconduct of Owner or its employees. Contractor shall carry liability insurance sufficient to cover its obligations under this provision and provide Owner with proof of such insurance.

10.20 Termination: This Agreement may be terminated; (a) by either party at any time for failure of the other party to comply with the terms and conditions of this agreement; (b) by either party, with thirty (30) days' prior written notice to the other party; or (c) upon mutual written agreement by both parties.

10.21 Assignment: Neither this Agreement, nor any rights or obligations hereunder shall be assigned or delegated by a party without the prior written consent of the other party.

10.22 Modification: This Agreement shall be modified only by a written agreement, duly executed by all parties hereto.

10.23 Assumption of Risk: The Contractor shall assume the risk of any loss of state or federal funding, either administrative or program dollars, due to its failure to comply with state and federal requirements. Laramie County shall notify Contractor of any state or federal determination of noncompliance.

10.24 Environmental Policy Acts: The Contractor agrees with all activities under this Agreement will comply with the Clean Air Act, the Clean Water Act, the National Environmental Policy Act, and other related provisions of federal environment protection laws, rules, or regulations.

10.25 Human Trafficking: As required by 22 U.S.C. 7104 (g) and 2 C.F.R. Part 175, this Agreement may be terminated without penalty if a private entity receives funds under this Agreement:

a. Engages in severe forms of trafficking in persons during the period of time that this award is in effect.

b. Procures a commercial sex act during the period of time that the award is in effect; or

c. Uses forced labor in the performance of the award of sub awards under this contract.

10.26 Kickbacks: The Contractor certifies and warrants that no gratuities, kickbacks, or contingency fees were paid in connection with this Agreement, nor were any fees, commissions, gifts, or other considerations made contingent upon the award of this Agreement. If the Contractor breaches or violates this warranty, Owner may, at is discretion, terminate this Agreement without liability to Owner, or deduct from the agreed upon price or consideration, or otherwise recover, the full amount of any commission, percentage, brokerage, or contingency fee.

10.27 Limitations on Lobbying Activities: By signing this Agreement, the Contractor certifies and agrees that, in accordance with Public Law 101-121, payments made from a federal grant shall not be utilized by the Contractor or its Subcontractors in connection with lobbying Congressmen, or any other federal agency in connection with the award of a federal grant, contract, cooperative agreement, or loan.

10.28 Monitoring Activities: Owner shall have the right to monitor all activities related to his Agreement that are performed by the Contractor or its Subcontractors. This shall include, but not limited to, the right to make site inspections at any time and with reasonable notice; to bring experts and consultants on site to examine or evaluate completed work or work in progress; to examine the books, ledgers, documents, papers, and records pertinent to this Agreement; and to observe personnel in every phase of performance of the related work.

10.29 Suspension and Debarment: By signing this Agreement, the Contractor certifies that neither it nor its principals are presently debarred, suspended, proposed for debarment, declared ineligible, or voluntarily excluded form participation in this transaction nor from federal financial or no-financial assistance, nor are any of the participants involved in the execution of this Agreement suspended, debarred, or voluntarily excluded by any federal department or agency in accordance with Executive Order 12549 (Debarment and Suspension) and CFR 44 Part 17, or are on the debarred vendors list. Further, the Contractor agrees to notify Owner by certified mail should it or any of its agents become debarred, suspended, or voluntarily excluded during the term of this Agreement.

IN WITNESS WHEREOF, the parties hereto have signed this Agreement in triplicate. One Counterpart each has been delivered to Owner, Contractor, and Engineer. All portions of the Contract Documents have been signed and identified by Owner or by Engineer on Owner's behalf, and Contractor.

This Agreement is effective the _____

SIGNATURE PAGE

OWNER: Laramie County

By: _____

Title: _____

Attest: _____

Title: _____

Title:_____

CONTRACTOR:

By: _____

Title: _____

(Corporate Seal)

Attest: _____

PERFORMANCE AND PAYMENT BOND REQUIREMENTS

1. Signature of principal must be affixed to the bond.

2. Signature of principal must be witnessed.

3. Name of principal must be witnessed.

4. The legal capacity of the principal must be stated in the caption of the bond (i.e., corporation, partnership, or sole proprietorship).

5. If the principal is jointly owned, all Owners must sign the bond.

6. If the principal is a partnership, at least two partners must sign the bond.

7. Signature of the attorney-in-fact acting on behalf of the surety company must appear on the bond.

8. The surety's seal must be affixed to the signature of the attorney-in-fact (Facsimile seals are NOT acceptable).

9. The bond must contain the signature and address for a resident agent of the surety company, qualified to do business in the State of Wyoming.

10. Power of Attorney/Acknowledgement of Surety must be signed, sealed, and dated with the same date as execution of bond.

11. Date of written Agreement and date of bond must be the same. Post-dated bonds are not acceptable.

12. Bond form must be completely executed. Bonds with blank spaces, including dates, are not acceptable.

13. The bond must be accompanied by a properly executed authorization of Power of Attorney.

CORPORATE PRINCIPALS ONLY:

1. The person signing on behalf of the corporate principal must state his/her legal capacity and he/she must be either the president or the vice-president if it is a corporation. If the officer or person signing on behalf of the corporate principal is other than the president or vice-president, there must be attached to the bond a resolution or certified evidence of authority that such office or person has authority to sign on behalf of the principal.

2. If the principal is a corporation, the signature of the principal must be witnessed or attested to by the secretary or assistant secretary of the corporation.

3. The corporate seal must be affixed to the signature of the principal. (Facsimile seals are NOT acceptable).

4. Each party is required to sign his or her own name.

5. All changes or strike-through must be initialed by the resident agent or attorney-in-fact of the surety. The surety must be notified of such changes.

EXAMPLE OF PERFORMANCE AND PAYMENT BOND

KNOWN ALL MEN BY THESE PRESENTS:

That_____
(Name of Contractor)

_____
(Address of the Contractor)

A _____, hereinafter called Principal, and

_____
(Name of Surety)

Hereinafter called Surety, are held and firmly bound unto Laramie County, 310 West 19th Street, Cheyenne, Wyoming 82001, hereinafter called Owner, in the penal sum of: _____ Dollars ($_____), in lawful money of the United States, for the payment of which sum well and truly to be made, we bind ourselves, successors and assigns, jointly severally, firmly by these presents.

THE CONDITION OF THIS OBLIGATION is such that Whereas, the Principal entered into a certain contract with the Owner, dated the _____ day of _____, 2023, a copy of which is hereto attached and made a part hereof, for the construction of the Clear Creek Park Basketball Court project.

NOW, THEREFORE, if the Principal shall well, truly and faithfully perform its duties, all the undertakings, covenants, terms and conditions, and agreements, of said contract during the original term thereof, and any extension thereof which may be granted by the Owner, with or without notice to the Surety and during the one (1) year guaranty period, and if the principal shall satisfy all the claims and demands incurred under such contact, and shall fully indemnify and save harmless of the Owner from all costs and damages which the Project may suffer by reason of failure to do so, and shall reimburse and repay the Owner all outlay and expense which the Owner may incur in making good any default, then this obligation shall be void; otherwise to remain in full force and effect.

PROVIDED, FURTHER, that the said Surety, for value received hereby stipulates and agrees that no change, extension of time, alteration, or addition to the terms of the contract or the to Work to be performed thereunder or the specifications accompanying the same shall in any wise affect its obligation on this bond, and it does hereby waive notice of any such change, extension of time, alteration, or addition to the terms of this contract or to the Work or to the specifications.

PROVIDED, FURTHER that no final settlement between the Owner and the Contractor shall abridge the right of any beneficiary hereunder whose claim may be unsatisfied.

IN WITNESS WHEREOF, this instrument is executed in _____ counterparts, each one-off which. Shall be deemed an original, this the _____ day of _____, 2023.

_____ (Witness)

_____ (Principal)

By: _____

_____ (Title)

_____

_____ (Address)

_____ (Witness)

_____ (Surety)

By: _____

_____

_____ (Attorney-in-fact)

Countersigned:

_____

(Address)

By: _____ (Wyoming Registered Agent)

_____

_____ (Address)

NOTE: Date of Bond must be same as date of Contract. If Contractor is a partnership, all partners should execute the Bond.

IMPORTANT: Surety companies executing bonds must appear on the Treasury Department's most current list (Circular 570 as amended) and be authorized to transact business in Wyoming.

CONTRACTORS CERTIFICATION OF COMPLETION

TO: _____

DATE: _____
PROJECT: _____
JOB NO: _____
CONTRACT NO: _____

ATTN: Resident Project Rep.

OWNER: Laramie County, Wyoming

FROM: _____
(Firm or Corporation)

This is to certify that, I, _____ am an authorized official of _____working in the capacity of _____ and have been properly authorized by said firm or corporation to Sign the following statements pertaining to the subject contract:

I know of my own personal knowledge, and do hereby certify, that the work of the contract described above has been performed, and materials used and installed in every particular, in accordance with, and in conformity to, the contract drawings and specifications.

The contract work is now complete, and ready for your final inspection.

I understand that neither the determination by the Engineer that the work is complete, nor the acceptance thereof by the Owner, shall operate as a bar to claim against the Contractor under the terms of the guaranteed provisions of the contract documents.

BY: _____

TITLE: _____

FOR: _____

DISTRIBUTION:

- Project Manager
- Field Office
- File

CONSENT OF SURETY FOR FINAL PAYMENT

Project Name: _____

Location: _____

Project No. _____ Contract No. _____

Type of Contract: _____

Amount of Contract: _____

In accordance with the provisions of the above named Contract between the Owner and the Contractor, the following name surety:

_____

On the Payment Bond of the following named Contractor:

_____

Hereby approves of final payment to the Contractor, and further agrees that said final payment to the Contractor shall not relieve the Surety Company named herein of any of its obligations to the following named Owner, as set forth in said Surety Company's bond:

_____

_____

IN WITNESS WHEREOF, the Surety Company has hereunto set its hand and seal this _____ day of _____, 2023.

_____
(Name of Surety Company

_____
(Signature of Authorized Representative)

Affix Corporate Seal here)

TITLE _____

FINAL WAIVER OF LIEN

TO ALL WHOM IT MAY CONCERN:

WHEREAS the undersigned has been employed by (A) _____

_____

To furnish labor and materials for (B) _____

_____under a contract (C) _____

_____for the improvement of the premises

Described as (D) _____ in Laramie County, State of

Wyoming of which Laramie County is the Owner.

NOW, THEREFORE, this _____ day of _____, 2023 for and in consideration of the sum of (E) _____

Dollars paid simultaneously herewith, the receipt whereof is hereby acknowledged by the undersigned, the undersigned does hereby waive and release any lien rights to, or claim of lien with respect to and on said above-described premises, and the improvements thereon, and on the monies or other considerations due or to become due from the Owner, on account of labor, services, material, fixture, apparatus or machinery heretofore or which may hereafter be furnished by the undersigned to or for the above described premises by virtue of said contract.

(F) _____ (SEAL)
(Name Of Sole Ownership, Corporation or Partnership)

(Affix corporate seal here)

_____ (SEAL)
(Signature of Authorized Representative)

TITLE: _____

INSTRUCTIONS FOR FINAL WAIVER:

A. Person or firm with whom you agreed to furnish either labor, or services, or materials, or both.

B. Fill in nature and extent of work; strike the word labor or the word materials if not in your contract.

C. If you have more than one contract on the same premises, describe the contract by number if available, date and extent of work.

D. Furnish an accurate enough description of the improvement and location of the premises so that it can be distinguished from any other property.

E. Amount shown should be the amount actually received and equal to total amount of contract as adjusted.

F. If waiver is for a corporation, corporate name should be used, corporate seal affixed and title of officer signing waiver should be set forth; if waiver is for a partnership, the partnership name should be used, partner should sign and designate himself as partner.

AFFIDAVIT OF RELEASE OF LIENS

TO ALL WHOM IT MAY CONCERN:

WHEREAS the undersigned has been employed by Laramie County to furnish labor and materials for the construction of the CLEAR CREEK PARK BASKETBALL COURT

Work, under a contract _____

For the improvement of the property described as Clear Creek Park in Laramie County, in the State of Wyoming, of which Laramie County is the Owner.

NOW, THEREFORE, this _____ day of _____, 2023.

The undersigned, as the Contractor for the above-named Contract pursuant to the conditions of the Contract hereby certifies that to the best of his knowledge, information and belief, except as listed below, the Releases or Waivers of Lien attached hereto include the Contractor, all Subcontractors, all suppliers of materials and equipment, and all performers of work, labor or services, who have or may have liens against any property of the Owner arising in any manner out of the performance of the Contract referenced above.

Exceptions: (if none, write "NONE". If required by the Owner, the Contractor shall furnish bond satisfactory to the Owner for each exception).

ATTACHMENTS:

1. Contractors Release or Waiver of Liens, conditional upon receipt of final payment.
2. Separate Releases or Waivers of Liens from Subcontractors and material and equipment suppliers.

CONTRACTOR: _____
(Name of sole ownership, corporation, or partnership)

(Affix Corporate Seal here)

_____ (SEAL)
(Signature of Authorized Representative)

TITLE: _____

AFFIDAVIT OF PAYMENT

TO ALL WHOM IT MAY CONCERN:

WHEREAS, the undersigned has been employed by _____ to furnish labor and materials for _____ Work, under a contract

_____

_____ for the improvements of the property described as

_____ In Laramie County, State of Wyoming of which Laramie County is the Owner.

NOW, THEREFORE, this _____ day of _____, 2023.

The undersigned, as the Contractor for the above-named Contract pursuant to the Conditions of the Contract hereby certifies that, except as listed below, he has paid in full or has otherwise satisfied all obligations for all materials and equipment furnished, for all work, labor, and services performed, and for all known indebtedness and claims against the Contractor for damages arising in any manner in connection with the performance of the Contract referenced above for which the Owner or his property might in any way be held responsible.

EXCEPTIONS: (If none, write "NONE"." If required by the Owner, the Contractor shall furnish bond satisfactory to the Owner for each exception.)

ATTACHMENTS:

i. Consent of Surety to Final Payment. (Whenever Surety is involved, Consent of Surety is required.)

ii. Contractors Release or Waiver of Liens, conditional upon receipt of final payment.

iii. Separate Releases or Waivers of Liens from Subcontractors and material and equipment suppliers.

iv. Contractors Affidavit of Release of Liens.

CONTRACTOR: _____ (SEAL)
(Name of Sole Ownership, Corporation or Partnership)

(Affix corporate seal here)

_____ (SEAL)
(Signature of Authorized Representative)

TITLE:_____

CONTRACT PAYMENT REQUEST

DATE: _____

LARAMIE COUNTY-CONTRACT PAYMENT REQUEST

PROJECT: CLEAR CREEK PARK BASKETBALL COURT

CONTRACTOR: _____

CONTRACT PAYMENT REQUEST NUMBER _____

The present status of the account for this contract is as follows:

Original Contract Amount	$ _____
Net Change by Change Orders to Date	$ _____
Current Contract Amount	$ _____
Total Completed to Date	$ _____
Less 10% Retainage	$ _____
Total Earned Less Retainage	$ _____
Less Previous Payments.....	$ _____
Total Payment Due	$ _____

DATE RECEIVED BY ENGINEER: _____

In the opinion of the Engineer, this estimate is complete and correct and conforms in all material respects with the requirements of the contract and payment is recommended:

RECOMMENDED BY: _____

ENGINEER-PROJECT MANAGER

REQUESTED BY: _____

CONTRACTOR

AUTHORIZED BY: _____

LARAMIE COUNTY REPRESENTATIVE

Part VI General Conditions

INSURANCE REQUIREMENTS

1. The Contractor shall file a Certificate of Insurance with Laramie County verifying each type of insurance coverage listed below.
2. The Certificate of Insurance shall be submitted to Laramie County prior to commencement of performance under this bid and the subsequent contract.
3. Type of Coverage — Minimum Limits

   Commercial General Liability ..... $500,000 per Occurrence

   (Including Projects and Completed Operations)..... $1,000,000 Aggregate

   Explosion, Collapse, Underground (XCU) ..... $500,000 per Occurrence

   Endorsements..... $1,000,000 Aggregate
   If applicable to the hazards of the specific project)

   Business Automobile Liability ..... $500,000 per Occurrence Worker's Compensation ..... Statutory

   Employer's Liability "Stop Gap" ..... $500,000 Each Accident

   (If afforded by voluntary Worker's Compensation).....$500,000 Each Disease-Policy Limit
   $500,000 Each Disease/Each Employee
4. It is understood and agreed that these policies are primary and not contributory. All insurance certificates must include a clause stating that the insurance may not be cancelled, amended, or allowed to lapse until the expiration of at least thirty (30) days advance written notice to Laramie County.
5. Laramie County shall be named as an additional insured on the Contractors insurance policies, with the exception of Worker's Compensation, and the Contractor shall provide, upon request, a copy of an endorsement providing this coverage.
6. Laramie County has the right to review the certificates of any or all Subcontractors used by the Contractor. Further, Laramie County has the right to require, as necessary, that the Subcontractors insurance coverage be equivalent to that required by the Contractor.
7. Laramie County has the right to increase the required minimum limit of liability on any contract project as warranted by an increase in hazard. Examples of increased hazard include, but are not limited to:
   a. Handling of hazardous materials.
   b. Activities involving large congregations of people.
8. Laramie County shall have the right to consult with the Contractors insurance agent for disclosure or relevant policy information. This would specifically involve, but not be limited to:
   a. Exclusions endorsed.
   b. Deductibles.

c. Claims in progress which could significantly reduce the annual aggregate limit.

d. "Claims made" vs. the occurrence form; if claims made, then advise:

   i. Retroactive dates.

   ii. Extended reporting periods of tails

INDEMNITY

To the fullest extent permitted by law, Contractor agrees to indemnify and hold harmless Laramie County, its elected and appointed officials, employees, volunteers, and Engineer from any and all liability for injuries, damages, claims, penalties, actions, demands, or expenses arising from or in connection with work performed by or on behalf of Contractor for Owner except to the extent liability is caused by the sole negligence or willful misconduct of Owner or its employees. Contractor shall carry liability insurance sufficient to cover its obligations under this provision and provide Owner with proof of such insurance.

It is expressly understood and agreed that Laramie County and the Engineer may have the right under this contract to observe and review the Work and operations of the Contractor, however, said observation shall not relive the Contractor from any covenants and obligations hereunder, and the Contractor shall be responsible for and hold Laramie County and the Engineer and their representatives harmless from all suits, actions, or claims of any character brought on account of any injuries or damages sustained by any person or property in consequence of any neglect in safeguarding the Work, observing safety standards or regulations, or otherwise, or through the use of unsafe or unacceptable materials in the construction or completion of the project, or the Contractors failure to comply with any law, ordinance or regulation.

NONDISCRIMINATION

All parties to the Agreement for this project assure that no person shall be excluded from participation in, denied the benefits of, or otherwise discriminated against in connection with the award and performance of this Agreement on the grounds of race, color, disability, national origin, or sex. The parties further assure that they will include the language of this paragraph in all agreements associated or connected in any way with this Agreement and shall cause all existing agreements to similarly include this clause therein.

COMPLIANCE WITH LAWS

The parties covenant and agree that they will perform their obligations as provided in the Agreement in accordance with all applicable laws and ordinances.

EEOC AND ADA COMPLIANCE

The Contractor is hereby notified that it must comply fully with all requirements of the Equal Employment Opportunity Commission (EEOC) and the Americans with Disabilities Act (ADA) in the same manner as is required by Laramie County. If the Contractor or its employees or Subcontractors are found in violation of these requirements, the Agreement may be terminated. The Contractor shall be responsible for all such non-compliant action and shall defend, hold harmless and indemnify Laramie County therefrom.

I.01. DEFINITIONS

Wherever used in these General Conditions or in the other Contract Documents, the following terms have the meanings indicated which are applicable to both the singular and plural thereof.

Agreement -The written agreement between Owner and Contractor covering the Work to be performed; other Contract Documents are attached to the Agreement.

Application for Payment -The form furnished by Engineer which is to be used by Contractor in requesting progress payments and which is to include the schedule of values required by I.14. Schedules and an affidavit of Contractor that progress payments therefore received on account of the Work have been applied by Contractor to discharge in full all of the Contractor's obligations reflected in prior Applications for Payment.

Bid - The offer or proposal of the Bidder submitted on the prescribed form setting forth the prices for the Work to be performed.

Bidder - Any person, firm or corporation submitting a Bid for the Work.

Bonds - Bid, performance and payment bonds and other instruments of security, furnished by Contractor and his surety in accordance with the Contract Documents.

Change Order - A written order to Contractor signed by Owner authorizing and addition, deletion or revision in the Work, or an adjustment in the Contract Price or the Contract Time issued after execution of the Agreement.

Contract Documents - The Agreement, Addenda (whether issued prior to the opening of Bids or the execution of the Agreement), Instructions to Bidders, Contractors Bid, the Bonds, the Notice of Award, these General Conditions, the Supplementary Conditions, the Specifications, Drawings and Modifications.

Contract Price - The total monies payable to Contractor under the Contract Documents.

Contract Time - The number of day's state in the Agreement for the completion of the Work, computed as provided in I.16.02 Computation of Time.

Contractor -The person, firm, or corporation with whom Owner has executed the Agreement.

County - The governmental entity of Laramie County, Wyoming.

Day - A calendar day of twenty-four hours measured from midnight to the next midnight.

Drawings - The drawings which show the character and scope of the Work to be performed and which have been prepared or approved by Engineer and are referred to in the Contract Documents.

Engineer - The person, firm or corporation named as such in the Agreement.

Field Order - A written order issued by Engineer which clarifies or interprets the Contract Documents in accordance with I.09.03, Clarifications and Interpretations, or orders minor changes in the Work in accordance with I.10 Changes in the Work, paragraph two.

Modification - (a) A written amendment of the Contract Documents signed by both parties, (b) a Change Order, (c) a written clarification of interpretation issued by Engineer in accordance with I.09.03 Clarifications and Interpretations, or (d) a written order for a minor change or alteration

in the Work issued by Engineer pursuant to I.10, Changes in the Work, paragraph two. A modification may only be issued after execution of the Agreement.

Notice of Award - The written notice by Owner to the apparent successful Bidder stating that upon compliance with the conditions precedent to be fulfilled by him within the time specified, Owner will execute and deliver the Agreement to him.

Notice to Proceed - A written notice given by Owner to Contractor (with a copy to Engineer) fixing the date on which the Contract Time will commence to run and on which Contractor shall start to perform his obligations under the Contract Documents.

Owner - A public body or authority, corporation, association, partnership, or individual for whom the Work is to be performed.

Project - The entire construction to be performed as provided in the Contract Documents.

Project Manual -Compilation of documents concerning bidding requirements which, in general, govern relationships prior to the execution of the Agreement (such as the Invitation to Bid, Instructions to Bidders, Bid Bonds and Notice of Award) and the other portions of the Contract Documents.

Resident Project Representation - The authorized representative of Engineer who is assigned to the Project site or any part thereof.

Retainage - The retention, into an account established by the Contractor per Section II-18, by the Owner of ten percent (10%) of the entitled payment to the Contractor until the project is completed and final payment is made.

Shop Drawings - All drawings, diagrams, illustrations, brochures, schedules, and other data which are prepared by Contractor, a Subcontractor, manufacturer, supplier, or distributor and which illustrate the equipment, material, or some portion of the Work.

Special Provisions - as used in this manual shall mean the same as Special Conditions.

Specifications - Those portions of the Contract Documents consisting of written technical descriptions of materials, equipment, construction systems, standards and workmanship as applied to the Work. The standard specifications for this project are the 2014 City of Cheyenne and Board Of Public Utilities Construction Specifications and Standard Drawings as amended by the Special Provisions to these standards and as noted on the design plans.

Subcontractor - An individual, firm or corporation having a direct contract with Contractor or with any other Subcontractor for the performance of a part of the Work at this site.

Substantial Completion - The date as certified by Engineer when the construction of the Project or a specified part thereof is sufficiently completed, in accordance with the Contract Documents, so that the Project or specified part can be utilized for the purposes for which it is intended; or if there be no such certification, the date when final payment is due in accordance with I.14.09, Approval of Final Payment, paragraph one.

Work - Any and all obligations, duties, and responsibilities necessary to the successful completion of the Project assigned to or undertaken by Contractor under the Contract Documents, including all labor, materials, equipment, and other incidentals, and furnishing thereof.

WYDOT - The Wyoming Department of Transportation.

I.02. PRELIMINARY MATTERS

I.02.01 Execution of Agreement:

At least three (3) counterparts of the Agreement and such other Contract Documents as practicable will be executed and delivered by Contractor to Owner within fifteen (15) days of the Notice of Award; and the Owner will execute all three (3) counterparts, retain one (1), deliver two (2) to the Engineer, and the Engineer will deliver one (1) to the Contractor following the next regularly scheduled County Commission Meeting. Engineer will identify those portions of the Contract Documents not so signed and such identification will be binding on all parties. Owner, Contractor, and Engineer shall each receive an executed counterpart of the Contract Documents and additional conformed copies as required.

I.02.02 Delivery of Bonds:

When he delivers the executed Agreements to Owner, Contractor shall also deliver to Owner such Bonds as he may be required to furnish in accordance with I.05.01, "Performance, Payment and other Bonds" paragraph one.

I.02.03 Copies of Documents:

Owner shall furnish to Contractor up to three (3) copies (unless otherwise provided in the Supplementary Conditions) of the Contract Documents as are reasonably necessary for the execution of the Work. Additional copies will be furnished, upon request, at the cost of reproduction.

I.02.04 Contractors Pre –Start Representations:

Contractor represents that he has familiarized himself with, and assumes full responsibility for having familiarized himself with the nature and extent of the Contract Documents, Work, locality, and with all local conditions and federal, state, and local laws, ordinances, rules, and regulations that may in any manner affect performance of the Work, and represents that he has correlated his study and observations with the requirements of the Contract Documents.

I.02.05 Commencement Of Contract Time; Notice To Proceed:

The Contract Time will commence to run on the thirtieth (30) day after the day on which the executed Agreement is delivered by Owner to Contractor; or, if a Notice to Proceed is given, on the day indicated in the Notice to Proceed. A Notice to Proceed may be given at any time within thirty (30) days after the day on which Owner delivers the executed Agreement to Contractor.

I.02.06 Starting The Project:

Contractor shall start to perform his obligations under the Contract Documents on the date when the Contract Time commences to run. No Work shall be done at the site prior to the date on which the Contract Time commences to run.

I.02.07 Before Starting Construction:

Before undertaking each part of the Work, Contractor shall carefully study and compare the Contract Documents and check and verify pertinent figures shown thereon and all applicable

field measurements. He shall at once report in writing to Engineer any conflict, error, or discrepancy which he may discover; however, he shall not be liable to Owner or Engineer for his failure to discover any conflict, error or discrepancy in the Drawings or Specifications.

Within ten (10) days after delivery of the executed Agreement by Owner to Contractor, Contractor shall submit to Engineer for approval, and estimated progress schedule indicating the starting and completion dates of the various stages of the Work, and a preliminary schedule of Shop Drawing submissions.

Before starting the Work at the site, Contractor shall furnish Owner and Engineer certificates of insurance as required by I.05, Bonds and Insurance, of these General Conditions. Within twenty (20) days after delivery of the executed Agreement by Owner to Contractor, but before starting the Work at the site, a conference will be held to review the above schedules, to establish procedures for handling Shop Drawings and other submissions and for processing Applications for Payment, and to establish a working understanding between the parties as to the Project. Present at the conference will be Owner or his representative, Engineer, Resident Project Representatives, Contractor, and his Superintendent.

I.03. CORRELATION, INTERPRETATION, AND INTENT OF CONTRACT DOCUMENTS

It is the intent of the Specifications and Drawings to describe a complete Project to be constructed in accordance with the Contract Documents. The Contract Documents comprise the entire Agreement between Owner and Contractor. They may be altered only by a modification.

The Contract Documents are complementary; what is called for by one is as binding as if called for by all. If Contractor finds a conflict, error, or discrepancy in the Contract Documents, he shall call it to the Engineer's attention in writing at once and before proceeding with the Work affected thereby; however, he shall not be liable to Owner or Engineer for his failure to discover any conflict, error or discrepancy in the Specifications or Drawings.

In resolving such conflicts, errors and discrepancies, the documents shall be given precedence in the following order: Agreement, Modifications, Addenda, Special Conditions, and Instructions to Bidders, General Conditions, Specifications and Drawings. Figure dimensions on Drawings shall govern over scale dimensions, and detailed Drawings shall govern over general drawings. Any Work that may be reasonably be inferred from the Specifications or Drawings as being required to produce the intended result shall be supplied whether or not it is specifically called for. Work, materials, or equipment described in words which so applied have a well-known technical or trade meaning shall be deemed to refer to such recognized standards.

I.04. AVAILABILITY OF LANDS-PHYSICAL CONDITIONS-REFERENCE POINTS

I.04.01 Availability of Lands:

Owner shall furnish, as indicated in the Contract Documents and not later than the date when needed by Contractor, the lands upon which the Work is to be done, rights-of-way for access thereto, and such other lands which are designated for the use of the Contractor. Easements for permanent structures or permanent changes in existing facilities will be obtained and paid for by Owner, unless otherwise specified in the Contract Documents. If Contractor believes that any delay in Owner's furnishings these lands or easements entitles him to an extension of the Contract Time, he may make a claim therefor as provided in I.12, Changes of the Contract Time.

Contractor shall provide for all additional lands and access thereto that may be required for temporary construction facilities or storage of materials and equipment. The Owner will not provide areas for trucks to turn around, equipment to be stored, stockpiling of materials, plant locations, etc. The Contractor will be responsible for obtaining such areas, if needed, and paying any associated fees, rent, etc.

I.04.02 Physical Conditions-Surveys and Reports:

Reference is made to the General Requirements of the Specifications for identification of those surveys and investigation reports of subsurface and latent physical conditions at the Project site or otherwise affecting performance of the Work which have been relied upon by Engineer in preparation of the Drawings and Specifications.

I.04.03 Unforeseen Physical Conditions:

Contractor shall promptly notify Owner and Engineer in writing of any subsurface or latent physical conditions at the site differing materially from those indicated in the Contract Documents. Engineer will promptly investigate those conditions and advise Owner in writing if further surveys and subsurface tests are necessary. Promptly thereafter, Owner shall obtain the necessary additional surveys and tests and furnish copies to Engineer and Contractor. If Engineer finds that the results of such surveys or tests indicate that there are subsurface or latent physical conditions which differ materially from those intended in the Contract Documents, and which could not reasonably have been anticipated by Contractor, a Change Order shall be issued incorporating the necessary revisions.

I.04.04 Reference Points:

The Owner has furnished horizontal and vertical control as described on the plans based on Engineer's Control Network. The Owner shall furnish such survey lines and grades as may be necessary for the proper control of the Work. The Contractor shall have sole responsibility for making careful and accurate measurements and for constructing the work accurate to the lines and grades shown on the plans. The Owner shall provide all necessary surveyors, equipment, labor, materials, stakes, nails, paint, flagging, etc., for use in setting grade and locations stakes. The Contractor shall furnish and place all necessary guide boards and appurtenances and give such other incidental assistance at the site as may be required for staking out the work.

I.05. <u>BONDS AND INSURANCE</u>

I.05.01 Performance, Payment, and Other Bonds:

Contractor shall furnish performance and payment bonds as security for the faithful performance and payment of all his obligations under the Contract Documents. These Bonds shall be in such form and with such sureties as are licensed to conduct business in the State of Wyoming and are named in the current list of "Surety Companies Acceptable on Federal Bonds" as published in the Federal Register by the Audit Staff Bureau of Account, U.S. Treasury Department.

The Contractor agrees to furnish a performance bond for one-hundred percent (100%) of the contract price. This bond is one that is executed in connection with a contract to secure fulfillment of all the Contractors obligations under such contract.

The Contractor agrees to furnish a payment bond for one hundred percent (100%) of the contract price. This bond is one that is executed in connection with a contract to assure payment as required by law of all persons supplying labor and material in the execution of the work provided for in the contract.

If the surety on any Bond furnished by Contractor is declared bankrupt or becomes insolvent or its right to do business is terminated in any state where any part of the Project is located, is revoked, the Contractor shall within five (5) days thereafter substitute another Bond and surety, both of which shall be acceptable to Owner.

I.05.02 Contractors Liability Insurance:

Contractor shall purchase and maintain such insurance as will protect him from claims under Workman's Compensation laws, disability benefit laws or other similar employee benefit laws; from claims for damages because of bodily injury, occupational sickness or disease or death of his employees, and claims insured by usual personal injury liability coverage from claims for damages because of bodily injury, sickness or disease, or death of any person other than his employees including claims insured by usual personal injury liability coverage and from claims for injury to or destruction of tangible property, including loss of use resulting therefrom-any or all of which may arise out of or result from Contractors operations under the Contract Documents, whether such operations be by himself or by and Subcontractor or anyone directly or indirectly employed by any of them or for those acts any of them may be legally liable. This insurance shall include the specific coverage's and be written for not less than any limits of liability and maximum deductibles specified in the Supplementary Conditions or General Requirements or required by law, whichever is greater, shall include contractual liability insurance and shall include Owner and Engineer as additional insured parties. Before starting the Work, Contractor shall file with Owner and Engineer certificates of such insurance, acceptable to Owner; these certificates shall contain a provision that the coverage afforded under the policies will not be canceled or materially changed until at least fifteen (15) days prior written notice has been given to Owner and Engineer.

I.05.03 Owners Liability Insurance:

Owner shall be responsible for purchasing and maintaining his own liability insurance and, at his option, may purchase and maintain such insurance as will protect him against claims which may arise from operations under the Contract Documents.

I.05.04 Additional Bonds and Insurance:

Prior to delivery of the executed Agreement by Owner to Contractor, Owner may require Contractor to furnish such other Bonds and such additional insurance, in such form and with such sureties or insurers as Owner may require. If such other Bonds or such other insurance are specified by written instructions given prior to opening of Bids, the premiums shall be paid by Contractor; if subsequent thereto, they shall be paid by Owner (except as otherwise provided in Section I.06.03, Substitute Materials or Equipment, paragraph one.

I.06. <u>CONTRACTORS RESPONSIBILITIES</u>

I.06.01 Supervision and Superintendence:

Contractor shall supervise and direct the Work efficiently and with his best skill and attention. He shall be solely responsible for the means, methods, techniques, sequences, and procedures of construction, but he shall not be solely responsible for the negligence of others in the design or selection of a specific means, method, technique, sequence, or procedure of construction which is indicated in and required by the Contract Documents. Contractor shall be responsible to see that the finished Work complies accurately with the Contract Documents.

Contractor shall keep on the Work at all times during its progress a competent resident superintendent, who shall not be replaced without written notice to Owner and Engineer except under extraordinary circumstances. The superintendent will be Contractor's representative at the site and shall have authority to act on behalf of Contractor. All communications given to the superintendent shall be as binding as if given to the Contractor.

I.06.02 Labor, Materials and Equipment:

Contractor shall provide competent, suitably qualified personnel to lay out the Work and perform construction as required by the Contract Documents. He shall at all times maintain good discipline and order at the Site.

Contractor shall furnish all materials, equipment, labor, transportation, construction equipment and machinery, tools, appliances, fuels, power, light, heat, telephone, water and sanitary facilities and all other facilities and incidentals necessary for the execution, testing, initial operation, and completion of the Work.

All materials and equipment shall be new, except as otherwise provided in the Contract Documents. If required by Engineer, Contractor shall furnish satisfactory evidence as to the kind and quality of materials and equipment.

All materials and equipment shall be applied, installed, connected, erected, used, cleaned, and conditioned in accordance with the instructions of the applicable manufacturer, fabricator, or processors, except as otherwise provided in the Contract Documents.

I.06.03 Substitute Materials or Equipment:

If the General Requirements of the Specifications, law, ordinance or applicable rules or regulations permit Contractor to furnish or use a substitute that is equal to any material or equipment specified, and if Contractor wishes to furnish or use a proposed substitute, he shall, prior to the conference called for by I.02.07 Before Starting Construction, paragraph three (unless another time is provided in the General Requirements), make written application to Engineer for approval of such a substitute certifying in writing that the proposed substitute will perform adequately the functions called for by the general design, be similar and of equal substance to that specified and be suited to the same use and capable of performing the same function as that specified; stating whether or not is incorporation in or use in connection with the Project is subject to the payment of any license fee or royalty and identifying all variations of the proposed substitute from that specified and indicating available maintenance service. No substitutes shall be ordered or installed without the written approval of Engineer who will be the judge of equality and may require Contractor to furnish such other data about the proposed substitute as he considers pertinent. No substitute shall be ordered or installed without such performance guarantee and bonds as Owner may require which shall be furnished at Contractors expense.

I.06.04 Concerning Subcontractors:

The Contractor shall not award Work to Subcontractor(s), in excess of fifty percent (50%) of the Contractor Price, without prior written approval of the Owner. Contractor shall not employ any Subcontractor or other person or organization (including those who are to furnish the principal items of materials or equipment), whether initially or as a substitute, against whom Owner or Engineer may have reasonable objection. A Subcontractor or other person or organization identified in writing to Owner and Engineer by Contractor prior to the Notice of Award and not objected to in writing by Owner or Engineer prior to the Notice of Award will be deemed acceptable to Owner and Engineer. Acceptance of any Subcontractor, other person or organization by Owner or Engineer shall not constitute a waiver of any right of Owner or Engineer to reject defective Work or Work not in conformance with the Contract Documents. If Owner or Engineer after due investigation has reasonable object to any Subcontractor, other person or organization proposed by Contractor after the Notice of Award, Contractor shall submit an acceptable substitute and the Contract Price shall be increased or decreased by the difference in cost occasioned by such substitution, and an appropriate Change Order shall be issued. Contractor shall not be required to employ any Subcontractor, other person, or organization against whom he has reasonable objection. Contractor shall not without the consent of Owner and Engineer make any substitution for any Contractor, other person or organization who has been accepted by Owner and Engineer unless Engineer determines that there is good cause for doing so.

Contractor shall be fully responsible for all acts and omissions of his Subcontractors and of persons and organizations directly or indirectly employed by them and of persons and organizations for whose acts any of them may be liable to the same extent that he is responsible for the acts and omissions of persons directly employed by him. Noting in the Contract Documents shall create any contractual relationship between Owner or Engineer and any Subcontractor or other person or organization having a direct contract with Contractor, nor shall it create any obligation on the part of the Owner or Engineer to pay or to see to the payment of any monies due any Subcontractor or other person or organization, except as may otherwise be required by law. Owner or Engineer may furnish to any Subcontractor or other person or organization, to the extent practicable, evidence of amounts paid to Contractor on account of specific Work done in accordance with the schedule of values.

The divisions and sections of the Specifications and the identifications of any Drawings shall not control Contractor in dividing the Work among Subcontractors or delineating the Work to be performed by any specific trade.

Contractor agrees to bind specifically every Subcontractor to the applicable terms and conditions of the Contract Documents for the benefit of the Owner.

I.06.05 Patent Fees and Royalties:

Contractor shall pay all license fees and royalties and assume all costs incident to the use in the performance of Work of any invention, design, process, product, or device which is the subject of patent rights or copyrights held by others. If a particular invention, design, process, product, or device is specified in the Contract Documents for use in the performance of the Work, and if to the actual knowledge of Owner or Engineer its use is subject to patent rights or copyrights

calling for the payment of any license fee or royalty to others, the existence for such rights shall be disclosed by Owner in the Contract Documents. Contractor shall indemnify and hold harmless Owner and Engineer and anyone directly or indirectly employed by either of them from and against all claims, damages, losses and expenses (including attorney's fees) arising out of any infringement of patent rights or copyrights incident to the use in the performance of the Work or resulting from the incorporation in the Work of any invention, design, process, product or device not specified in such Contract Documents, and shall defend all such claims in connection with any alleged infringement of such rights.

I.06.06 Permits:

Contractor shall obtain and pay for all construction permits and licenses and shall pay all governmental charges and inspection fees necessary for the prosecution of the Work, which are applicable at the time of his Bid. Owner shall assist Contractor, when necessary, in obtaining such permits and licenses. Contractor shall also pay all public utility charges.

The Owner will provide all required construction permits from Laramie County which are necessary for the execution of the Work. The Contractor shall be required to hold any pay for all licenses required and shall also pay for all utility charges.

I.06.07 Laws and Regulations:

Contractor shall give all notices and comply with all laws, ordinances, rules, and regulations applicable to the Work. If Contractor observes that the Specifications or Drawings are at variance therewith, he shall give Engineer prompt written notice thereof, and any necessary changes shall be adjusted by an appropriate Modification. If Contractor performs any Work knowing it to be contrary to such laws, ordinances, rules, and regulations, and without such notice to Engineer, he shall bear all costs arising therefrom; however, it shall not be his primary responsibility to make certain that the Specifications and Drawings are in accordance with such laws, ordinances, rules, and regulations.

I.06.08 Taxes:

Contractor shall pay all sales, consumer, use and other similar taxes required to be paid by him in accordance with the law of the place where the Work is to be performed.

I.06.09 Use of Premises:

Contractor shall confine his equipment, the storage of materials and equipment and the operations of his workmen to areas permitted by law, ordinances, permits, or the requirements of the Contract Documents, and shall not unreasonably encumber the premises with materials or equipment.

Contractor shall not load or permit any part of any structure to be loaded with weights that will endanger the structure, nor shall he subject any part of the Work to stresses or pressures that will endanger it.

I.06.10 Record Drawings:

Contractor shall keep one record copy of all Specifications, Drawings, Addenda, Modifications, and Shop Drawings at the site in good order and annotated to show all changes made during the construction process. These shall be available to Engineer and shall be delivered to the

Engineer for the Owner upon completion of the Project. Note: Further provisions in respect of such record drawings may be included in the General Requirements.

I.06.11 Safety and Protection:

Contractor shall be responsible for initiating, maintaining, and supervising all safety precautions and programs in connection with the Work. He shall take all necessary precautions for the safety of, and shall provide the necessary protection to prevent damage, injury, or loss to:

a. All employees on the Work and other persons who may be affected thereby.

b. All of the Work and all materials or equipment to be incorporated therein, whether in storage on or off the site and,

c. Other property at the site or adjacent thereto, including trees, shrubs, lawns, walks, pavements, roadways, structures, and utilities not designated for removal, relocation, or replacement in the course of construction.

Contractor shall comply with all applicable laws, ordinances, rules, regulations, and orders of any public body having jurisdiction for the safety of persons or property or to protect them from damage, injury, or loss. He shall erect and maintain, as required by the conditions and progress of the Work, all necessary safeguards for its safety and protection. He shall notify the Owners of adjacent utilities when prosecution of the Work may affect them. All damage, injury or loss to any property referred to in paragraph b or c above, caused directly or indirectly, ,in whole or part, by Contractor, Subcontractor or anyone directly or indirectly employed by any of them or anyone for whose acts any of them may be liable, shall be remedied by Contractor: except damage or loss attributable to the fault of Drawings or Specifications or to the acts or omissions of Owner or Engineer or anyone employed by either of them or anyone for whose acts either of them may be liable, and not attributable, directly or indirectly, in whole or in part, to the fault or negligence of Contractor.

Contractors' duties and responsibilities for the safety and protection of the Work shall continue until such time as all the Work is completed and Engineer has issued a notice to Owner and Contractor in accordance with I.14.09, Approval of Final Payment, that Work is acceptable.

Contractor shall designate a responsible member of his organization at the site whose duty shall be the prevention of accidents. This person shall be Contractor's superintendent unless otherwise designated in writing by Contractor to Owner.

I.06.12 Emergencies:

In emergencies affecting the safety of persons or the Work or property at the site or adjacent thereto, Contractor, without special instruction or authorization from Engineer or Owner, is obligated to act, at his discretion, to prevent threatened damage, injury, or loss. He shall give Engineer prompt written notice of any significant changes in the Work or deviations from the Contract Documents caused thereby, and a Change Order shall thereupon be issued covering the changes and deviations involved. If Contractor believes that additional Work done by him in an emergency which arose from causes beyond his control entitles him to an increase in the Contract Price or an extension of the Contract Time, he may make a claim therefor as provided in I.11 Change Of Contract Price, and I.12, Change of the Contract Time.

The Contractor shall be responsible for notifying the residents which will be affected by the current construction activity. He shall also be responsible to notify daily all emergency services (fire district, sheriff, etc.) of any disruption in traffic circulation.

I.06.13 Shop Drawings and Samples:

After checking and verifying all field measurements, Contractor shall submit to Engineer for approval, in accordance with the accepted schedule of Shop Drawings submissions (See I.02.07, Before Starting Construction, paragraph two) five (5) copies (or at Engineer's option, one reproducible copy) of all Shop Drawings, which shall have been checked by and stamped with the approval of Contractor and identified as Engineer may require. The data shown on the Shop Drawings will be complete with respect to dimensions, design criteria, materials of construction and the like to enable Engineer to review information as required.

Contractor shall also submit to Engineer for approval with such promptness as to cause no delay in Work, all samples required by the Contract Documents. All samples will have been checked and stamped with the approval of the Contractor, identified clearly as to material, manufacturer, any pertinent catalog numbers, and the use for which intended.

At the time of each submission, Contractor shall in writing call Engineer's attention to any deviations that the Shop Drawings or sample may have from the requirements of the Contract Documents.

Engineer will review and approve with reasonable promptness Shop Drawings and samples, but his review and approval shall be only for conformance with the design concept of the Project and for compliance with the information given in the Contract Documents. The approval of a separate item as such will not indicate approval of the assembly in which the item functions. Contractor shall make any corrections required by Engineer and shall return the number of corrected copies of Shop Drawings and resubmit new samples until approved. Contractor shall direct specific attention in writing or on resubmitted Shop Drawings to revisions other than the corrections call for by Engineer on previous submissions. Contractor's stamp of approval on any Shop Drawings or sample shall constitute a representation to Owner and Engineer that Contractor has either determined and verified all quantities, dimensions, field construction criteria, materials, catalog numbers, and similar data or he assumes full responsibility for doing so, and that he has reviewed or coordinated each Shop Drawing or sample with the requirements of the Work and Contract Documents.

Where a Shop Drawing or sample submission is required by the Specifications, no related Work shall be commenced until the submission has been approved by the Engineer. A copy of each approved Shop Drawing and each approved sample shall be kept in good order by Contractor at the site and shall be available to Engineer.

Engineer's approval of Shop Drawings or samples shall not relieve Contractor from his responsibilities for any deviations from the requirements of the Contract Documents unless Contractor has in writing called Engineer's attention to such deviation at the time of submission and Engineer has given written approval to the specific deviation, nor shall any approval by Engineer relieve Contractor from responsibility for errors or omissions in the Shop Drawings. Note: Further provisions in respect to Shop Drawings and samples may be included in the General Requirements.

I.06.14 Cleaning:

Contractor shall keep the premises free from accumulations of waste materials, rubbish and other debris resulting from the Work, and at the completion of the Work he shall remove all waste materials, rubbish, and debris from and about the premises as well as all tools, construction equipment and machinery, and surplus materials, and shall leave the site clean and ready for occupancy by Owner. Contractor shall restore to their original condition those portions of the site not designated for alteration by the Contract Documents. Notice: Further provisions in respect of cleaning may be included in the General Requirements.

I.06.15 Indemnification:

Contractor shall indemnify and hold harmless Owner and Engineer and their agents and employees from and against all claims, damages, losses and expenses including attorney's fees arising out of or resulting from the performance of the Work, provided that any such claim, damage, loss or expense (a) is attributable to bodily injury, sickness, disease or death, or to injury to or destruction of tangible property (other than the Work itself) including the loss of use resulting therefrom and (b) is caused in whole or part by any negligent act or omission of Contractor, any Subcontractor, anyone directly or indirectly employed by any of them or anyone from whose acts any of them may be liable, regardless of whether or not it is caused in part by a party indemnified hereunder.

In any and all claims against Owner or Engineer or any of their agents or employees by any employee of Contractor, and Subcontractor, anyone directly or indirectly employed by any of them or anyone for whose acts any of them may be liable, the indemnification obligation under this section paragraph one above, shall not be limited in any way by any limitation on the amount or type of damages, compensation or benefits payable by or for Contractor or any Subcontractor under workmen's compensation acts, disability benefit acts, or other employee benefit acts.

The obligations of Contractor under this section, paragraph one above, shall not extend to the liability of Engineer, his agents or employees arising out of (a) the preparation or approval of maps, drawings, opinions, reports, surveys, Change Orders, designs, or specifications or (b) the giving of or the failure to give directions or instructions by Engineer, his agents or employees provided such giving or failure to give is the primary cause of injury or damage.

I.07. <u>WORK BY OTHERS</u>

Owner may perform additional Work related to the Project by himself, or he may let other direct contracts within which shall contain General Conditions similar to these. Contractor shall afford the other contractors who are parties to such a direct contract (or Owner, if he is performing the additional Work himself), reasonable opportunity for the introduction and storage of materials and equipment and the execution of Work, and shall properly connect and coordinate his work with theirs.

If any part of the Contractors Work depends for proper execution or results upon the Work of any such other Contractor (or Owner), Contractor shall inspect and promptly report to Engineer in writing, any defects or deficiencies in such Work that render it unsuitable for such proper execution and results. His failure to report shall constitute an acceptance of the other work as fit

and proper for the relationship of his Work except as to defects and deficiencies which may appear in the other work after the execution of his Work.

Contractor shall do all the cutting, fitting, and patching of his Work that may be required to make its several parts come together properly and fit it to receive or be received by such other Work. Contractor shall not endanger any Work of others by cutting, excavating, or otherwise altering their Work and will only cut or alter their Work with the written consent of the Engineer and of the other contractors whose Work will be affected.

If the performance of additional Work by other contractors or Owner is not noted in the Contract Documents prior to the execution of the contract, written notice thereof shall be given to the Contractor prior to starting any such additional Work. If Contractor believes that the performance of such additional Work by Owner or others involves him in additional expense or entitles him to an extension of the Contract Time, he may make a claim therefor as provided in I.11, Change of Contract Price and I.12 Change of Contract Time.

I.08. OWNER'S RESPONSIBILITIES

I.08.01 Owner shall issue all communications to Contractor through Engineer.

In case of termination of the employment of Engineer, Owner shall appoint an Engineer against whom Contractor makes no reasonable objection, whose status under the Contract Documents shall be that of the former Engineer. Contract Work shall stop and will not be resumed until the new Engineer is on site.

Owner shall furnish the data required of him under the Contract Documents promptly and shall make payments to Contractor promptly after they are due as provided in I.14.04, Approval of Payments, paragraph one, and I.14.09 Approval of Final Payment, paragraph one.

Owner's duties in respect of providing lands and easements and providing Engineering surveys to establish reference points are set forth in I.04 Availability of Lands, and I.04.04, Reference Points. I.04.02, Physical Conditions-Surveys and Reports, refers to Owners identifying and making available to Contractor copies of surveys and investigation reports of subsurface and latent physical conditions at the site or otherwise affecting performance of the Work which has been relied upon by Engineer in preparing the Drawings and Specifications.

Owner's Responsibilities in respect to liability and property insurance are set forth in I.05.03 Owner's Liability Insurance.

In addition to his rights to request changes in the Work in accordance with I.10 Changes in the Work, Owner, (especially in certain instances as provided in I.10, paragraph four) shall be obligated to execute Change Orders.

Owner's responsibility in respect of certain inspections, tests and approvals is set forth in I.13.02 Tests and Inspections.

In connection with Owners right to stop Work or suspend Work, see I.13.05 Owner May Stop the Work, and I.15.01, Owner May Suspend Work. I.15.02 Owner May Terminate; paragraph one, deals with Owner's right to terminate services of Contractor under certain circumstances.

I.09. ENGINEER'S STATUS DURING CONSTRUCTION

I.09.01 Owners Representative:

Engineer will be Owner's representative during the construction period. The duties and responsibilities and the limitations of authority of Engineer as Owner's representative during construction are set forth in I through I.16, inclusive, of these General Conditions and shall not be extended without written consent of Owner and Engineer.

I.09.02 Visits to Site:

Engineer will make periodic visits to the site to observe the progress and quality of the extended Work and to determine, in general, if the Work is proceeding in accordance with the Contract Documents. He will not be required to make exhaustive or continuous on-site expectations to check the quality or quantity of the Work. His efforts will be directed toward providing assurance for Owner that the completed Project will conform to the requirements of the Contract Documents. On the basis of his on-site observations as an experienced and qualified design professional, he will keep Owner informed of the progress of the work and will endeavor to guard Owner against defects and deficiencies in the Work of the Contractors.

I.09.03 Clarifications and Interpretations:

Engineer will issue with reasonable promptness such written clarifications or interpretations of the Contract Documents (in the form of Drawings or otherwise) as he may deem necessary, which shall be consistent or reasonably inferable from the overall intent of the Contract Documents. If Contractor believes that a written clarification and interpretation entitles him to an increase in the Contract Price, he may make a claim therefor as provided in I.11 Change of Contract Price.

I.09.04 Rejecting Defective Work:

Engineer will have authority to disapprove or reject Work which is "defective" (which term is hereinafter used to describe Work that is unsatisfactory, faulty, or defective, or does not conform to the requirements of the Contract Documents or does not meet the requirements of any inspection, test or approval referred to in I.13.02 Tests and Inspections, paragraph one, or has been damaged prior to approval of final payment). Engineer will also have authority to require special inspection or testing of the Work as provided in I.13.04, Uncovering Work, paragraph two, whether or not the Work is fabricated, installed, or completed.

I.09.05 Shop Drawings, Change Orders and Payments:

In connection with Engineer's responsibility for Shop Drawings and samples, see I.06.13Shop Drawings and Samples.

In connection with Engineer's responsibilities for Change Orders, See I.10, Changes In The Work, I.11, Change of Contract Price, and I.12 Change of the Contract Time.

In connection with Engineer's responsibilities in respect of Applications for Payment, etc., see I.14 Payments and Completion.

I.09.06 Resident Project Representatives:

If Owner and Engineer agree, Engineer will furnish a Resident Project Representative and assistants to Assist Engineer in carrying out his responsibilities at the site. The duties, responsibilities, and limitations of authority of any such Resident Project Representative and assistants shall be set forth in an exhibit to be incorporated in the Contract Documents.

I.09.07 Decisions on Disagreements:

Engineer will be the interpreter of the requirements of the Contract Documents and the judge of the performance thereunder. In his capacity as interpreter and judge, he will exercise his best efforts to insure faithful performance by both Owner and Contractor. He will not show partiality to either and will not be liable for the result of any interpretation or decision rendered in good faith. Claims, disputes, and other matters relating to the execution and progress of the Work or the interpretation of or performance under the Contract Documents shall be referred to Engineer for decision, which he will render in writing within a reasonable time.

I.09.08 Limitations on Engineer's Responsibilities:

Neither Engineer's authority to act under I.09 or elsewhere in the Contract Documents nor any decision made by him in good faith either to exercise or not exercise such authority shall give rise to any duty or responsibility of Engineer to Contractor, any Subcontractor, any material man, fabricator, supplier or any of their agents or employees or any other person performing any of the Work.

Engineer will not be responsible for Contractors means, methods, techniques, sequences or procedures of construction, or the safety precautions and programs incident thereto, and he will not be responsible for Contractor's failure to perform the Work in accordance with the Contract Documents.

Engineer will not be responsible for the acts or omissions of Contractor, or any Subcontractors, or any of his or their agents or employees, or any other persons at the site or otherwise performing any of the Work.

I.10. CHANGES IN THE WORK

Without invalidating the Agreement, Owner may, at any time or from time to time, order additions, deletions, or revisions in the Work; these will be authorized by Change Orders. If a change Order alters or modifies the design beyond the scope of approved plans and specifications, the changes must be approved the reviewing agencies prior to construction. Upon receipt of a Change Order, Contractor shall proceed with the Work involved. All such Work shall be executed under the applicable conditions of the Contract Documents. If any Change Order causes an increase or decrease in the Contract Price or an extension or shortening of the Contract Time and equitable adjustment will be made as provided in I.11, Change of Contract Price, or I.12, Change in Contract Time, on the basis of a claim made by either party.

A Change Order or Written Amendment when executed, constitutes a modification to the Agreement and all provisions of the Agreement, except as modified by Written Amendments or Change Order as full compensation, both time and cost, for the additional Work and delays caused thereby.

Engineer may authorize minor changes or alterations in the Work not involving extra cost and consistent with the overall intent of the Contract Documents. These may be accomplished by a Field Order. If Contractor believes that any minor change or alteration authorized by Engineer entitles him to an increase in the Contract Price, he may make a claim therefor as provided in I.11 Change of Contract Price.

Additional Work performed by Contractor without authorization of a Change Order will not entitle him to an increase in the Contract Price or an extension of the Contract Time, except in the case of an emergency as provided in I.06.12 Emergencies, and except as provided in the preceding paragraph and I.13.04, Uncovering Work, in paragraph two.

Owner shall execute appropriate Change Orders prepared by Engineer covering changes in the Work to be performed as provided in I.04.03 Unforeseen Physical Conditions, and Work performed in an emergency as provided in I.06.12, Emergencies, and any other claim of Contractor for a change in the Contract Time or the Contract Price which is approved by Engineer.

It is Contractor's responsibility to notify his Surety of any changes affecting the general scope of the Work or change in the Contract Price and the amount of the applicable Bonds shall be adjusted accordingly. Contractor shall furnish proof of such adjustment to Owner.

I.11. CHANGE OF CONTRACT PRICE

The Contract Price constitutes the total compensation payable to Contractor for performing the Work. All duties, responsibilities and obligations assigned to or undertaken by Contractor shall be at his expense without change in the Contract Price.

The Contract Price may only be changed by a Change Order. Any claim for an increase in the Contract Price shall be based on written notice delivered to Owner and Engineer within fifteen (15) days of the occurrence of the event giving rise to the claim. Notice of the amount of the claim with supporting data shall be delivered within forty-five (45) days of such occurrence unless Engineer allows an additional period of time to ascertain accurate cost data. All claims for adjustments in the Contract Price shall be determined by Engineer if Owner and Contractor cannot otherwise agree on the amount involved. Any change in the Contract Price resulting from any such claim shall be incorporated in a Change Order.

The value of any Work covered by a Change Order or any claim for an increase or decrease in the Contract Price shall be determined in one of the following ways:

a. Where the Work involved is covered by unit prices contained in the Contract Documents, by application of unit prices to the quantities of the items involved.

b. By mutual acceptance of a lump sum.

c. On the basis of the Cost of the Work (determined as provided in I.11.01 and I.11.02) plus a Contractors Fee for overhead and profit (determined as provided in I.11.03).

I.11.01 Cost of the Work:

The term Cost of the Work means the sum of all costs necessarily incurred and paid by the Contractor in the proper performance of the Work. Except as otherwise may be agreed to in writing by Owner, such costs shall be in the amounts no higher than those prevailing in the locality of the Project, shall include only the following items and shall not include any of the costs itemized in I.11.02:

a. Payroll costs for employees in the direct employ of Contractor in the performance of the Work under schedules of job classifications agreed upon by Owner and Contractor.

Payroll costs for employees not employed full time on the Work shall be apportioned on the basis of their time spent on Work.

Payroll costs shall include, but not be limited to, salaries and wages plus the cost of fringe benefits which shall include social security contributions, unemployment, excise, and payroll taxes, workmen's compensation, health and retirement benefits bonuses, sick leave, vacation, and holiday pay applicable thereto. Such employees shall include superintendents and foreman at the site. The expenses of performing Work after regular hours, on Sunday or legal holidays shall be included in the above to the extent authorized by Owner.

b. Cost of all materials and equipment furnished and incorporated in the Work, including costs of transportation and storage thereof, and manufacturers' field services required in connection therewith. All cash discounts shall accrue to Contractor unless owner deposits funds with Contractor with which to make payments, in which case discounts shall accrue to Owner. All trade discounts, rebates and refunds, and all returns from sale of surplus materials and equipment shall accrue to Owner, and Contractor shall make provisions so that they may be obtained.

c. Payments made by Contractor to the Subcontractors for Work Performed by Subcontractors. If required by Owner, Contractor shall obtain competitive bids from Subcontractors acceptable to him and shall deliver such bids to Owner who will then determine with the advice of Engineer, which bids will be accepted. If a subcontract provides that the Subcontractor is to be paid on the basis of Cost of the Work plus a Fee, the Cost of the Work shall be determined in accordance with I.11.01 and I.11.02, Cost of the Work. All subcontracts shall be subject to the other provisions of the Contract Documents insofar as applicable.

d. Costs of special consultants (including, but not limited to, engineers, architects, testing laboratories, surveyors, lawyers, and accountants) employed for services specifically related to the Work.

e. Supplemental costs including the following:

    1. The proportion of necessary transportation, traveling and subsistence expense of Contractors employees incurred in discharge of duties connected with the Work.

    2. Cost, including transportation and maintenance, of all materials, supplies, equipment, machinery, appliances, office and temporary facilities at the site and hand tools not owned by the workmen, which are consumed in the performance of the Work, and cost less market value of such items used but not consumed which remain the property of Contractor.

    3. Rentals of all construction equipment and machinery and the parts thereof whether rented from Contractor or others in accordance with rental agreements approved by Owner with the advice of Engineer, and the costs of transportation, loading, unloading, installation, dismantling and removal thereof-all in accordance with terms of said rental agreements. The rental of any such equipment, machinery or parts shall cease when the use thereof is no longer necessary for the Work.

4. Sales, use, or similar taxes related to the Work, and for which Contractor is liable, imposed by any governmental authority.
5. Deposits lost for causes other than Contractor's negligence, royalty payments and fees for permits and licenses.
6. Losses, damages, and expenses, not compensated by insurance or otherwise, sustained by Contractor in connection with the execution of, and to, the Work, provided they have resulted from causes other than the negligence of Contractor, and Subcontractor, or anyone directly or indirectly employed by any of them or for whose acts any of them may be liable. Such losses shall include settlements made with the written consent and approval of Owner. No such losses, damages and expenses shall be included in the Cost of the Work for the purpose of determining Contractors Fee. If, however, any such loss or damage requires reconstruction and Contractor is placed in charge thereof, he shall be paid for his services a fee proportionate to that stated in I.11.03 Contractors Fee, subparagraph (b).
7. The cost of utilities, fuel, and sanitary facilities at the site.
8. Minor expenses such as long distance telephone calls, telephone services at the site, expressage, and similar petty cash items in connection with the Work.
9. Cost of premiums for bonds and insurance which Owner is required to pay in accordance with I.05.04 Additional Bonds and Insurance.

I.11.02 Cost of the Work:

The term Cost of the Work shall not include any of the following:

a. Payroll costs and other compensation of Contractors officers, executives, principals (of partnership and sole proprietorships), general managers, engineers, architects, estimators, lawyers, auditors, accountants, purchasing and contracting agents, expediters, timekeepers, clerks and other personnel employed by Contractor whether at the site or in the principal or a branch office for general administration of the Work and not specifically included in the schedule referred to in I.11.01 Cost of the Work, subparagraph (a), all of which are to be considered administrative costs covered by the Contractors Fee.
b. Expenses of Contractors principal and branch offices other than his office at the site.
c. Any part of Contractors capital expenses, including interest on Contractor's capital employed for the Work and charges against Contractor for delinquent payments.
d. Cost of premiums for all bonds and for all insurance policies whether or not Contractor is required by the Contract Documents to purchase and maintain the same (except as otherwise provided in I.11.01 Cost of the Work, Subparagraph (e) (9).
e. Costs due to the negligence of Contractor, any Subcontractor, or anyone directly or indirectly employed by any of them or for whose acts any of them may be liable, including but not limited to, the correction of defective Work, disposal of materials or equipment wrongly supplied and making good any damage to property.

f. Other overhead or general expenses costs of any kind and the costs of any item not specifically and expressly included in I.11.01 Cost of the Work.

I.11.03 Contractors Fee:

a. The Contractors Fee which shall be allowed to Contractor for his overhead and profit shall be determined as follows:

b. A mutually acceptable fixed fee: or if none can be agreed upon,

c. A fee based on the following percentages of the various portions of the Cost of the Work.

1. For costs incurred under I.11.01 Cost of the Work, subparagraph (a) and (b), the Contractors Fee shall be ten percent.

2. For costs incurred under I.11.01 Cost of the Work, Subparagraph (c), the Contractors fee shall be five percent; and if a subcontract is on the basis of Cost of the Work Plus a Fee, the maximum allowable to the Subcontractor as a fee for overhead and profit shall be ten percent, and

3. No fee shall be payable on the basis of costs itemized under I.11.01, Cost of the Work, subparagraphs (d) and (e) and I.11.02 Cost of the Work.

The amount of credit to be allowed by Contractor to Owner for any such change which results in a net decrease in cost will be the amount of the actual net decrease. When both additions and credits are involved in any one change, the combined overhead and profit shall be figured on the basis of the net increase, if any.

Whenever the cost of any Work is to be determined pursuant to I.11.01 and I.11.02, Cost of the Work, Contractor will submit in form prescribed by Engineer an itemized cost breakdown together with supporting data.

I.11.04 Cash Allowances:

It is understood that Contractor has included in the Contract Price all allowances so named in the Contract Documents and shall cause the Work so covered to be done by such material men, suppliers, or Subcontractors and for such sums within the limit of the allowances as Engineer may approve. Upon final payment, the Contract Price shall be adjusted as required and an appropriate Change Order issued. Contractor agrees that the original Contract Price includes such sums as he deems proper for costs and profit on account of cash allowances. No demand for additional cost or profit in connection therewith will be allowed.

I.12. CHANGE OF THE CONTRACT TIME

The Contract Time may only be changed by a Change Order. Any claim for an extension in the Contract Time shall be based on written notice delivered to Owner and Engineer within fifteen (15) days of the occurrence of the event giving rise to the claim. Notice of the extent of the claim with supporting data shall be delivered within forty-five (45) days of such occurrence unless Engineer allows an additional period of time to ascertain more accurate data. All claims for adjustment in the Contract Time shall be determined by Engineer if Owner and Contractor cannot otherwise agree. Any change in the Contract Time resulting from any such claim shall be incorporated in a Change Order.

The Contract Time will be extended in an amount equal to time lost due to delays beyond the control of Contractor if he makes a claim therefor as provided in the preceding paragraph. Such delays shall include, but not be restricted to, acts of neglect by any separate contractor employed by Owner, fires, floods, labor disputes, epidemics, abnormal weather conditions, or acts of God.

All time limits stated in the Contract Documents are of the essence of the Agreement. The provisions of this I.12 Change of the Contract Time, shall not exclude recovery for damages (including compensation for additional professional services) for delay by either party.

I.13. WARRANTY AND GUARANTEE; TESTS AND INSPECTIONS; CORRECTION, REMOVAL OR ACCEPTANCE OF DEFECTIVE WORK

I.13.01 Warranty and Guarantee:

Contractor warrants and guarantees to Owner and Engineer that all materials and equipment will be new unless otherwise specified and that all Work will be of good quality and free from faults or defects and in accordance with the requirements of the Contract Documents and of any inspections, tests or approvals referred to in I.13.02 Tests and Inspections. All unsatisfactory Work, all faulty or defective Work, and all Work not conforming to the requirements of the Contract Documents at the time of acceptance thereof or of such inspections, test, or approvals, shall be considered defective. Prompt notice of all defects shall be given to the Contractor. All defective Work, whether or not in place, may be rejected, corrected or accepted as provided in this I.13 Warranty and Guarantee; I.13.02 Tests and Inspections: I.13.06 Correction, Removal or Acceptance of Defective Work.

I.13.02 Tests and Inspections:

If the Contract Documents, laws, ordinances, rules, regulations, or orders of any public authority having jurisdiction require any Work to specifically be inspected, tested, or approved by some public body, Owner shall assume full responsibility therefor, pay all costs in connection therewith. Any further specific division of testing responsibilities will be defined in the Special Conditions.

Contractor shall give Engineer timely notice of readiness of the Work for all inspections, tests, or approvals. If any such Work required so to be inspected, tested, or approved is covered without written approval of Engineer, it must, if required by Engineer, be uncovered for observation, and such uncovering shall be at Contractors expense unless Contractor has given Engineer timely notice of his intention to cover such Work and Engineer has not acted with reasonable promptness in response to such notice.

Observations by neither Engineer nor inspections, tests, or approvals by persons other than Contractor shall relieve Contractor from his obligation to perform the Work in accordance with the requirements of the Contract Document.

I.13.03 Access to Work:

Engineer and his representatives and other representatives of Owner will at reasonable times have access to the Work. Contractor shall provide proper and safe facilities for such access and observation of the Work and also for any inspection or testing thereof by others.

I.13.04 Uncovering Work:

If any Work is covered contrary to the written request of Engineer, it must, if requested by Engineer, be uncovered for his observation, and replaced at Contractors expense.

If any Work has been covered which Engineer has not specifically requested to observe prior to its being covered, or if Engineer considers it necessary or advisable that covered Work be inspected or tested by others, Contractor, at Engineer's expense, shall uncover, expose, or otherwise make available for observation, inspection or testing as Engineer may require, that portion of the Work in question, furnishing all necessary labor, material, and equipment. If it is found that such Work is defective, Contractor shall bear all the expenses of such uncovering, exposure, observation, inspection, and testing and of satisfactory reconstruction, including compensation for additional professional services, and an appropriate deductive Change Order shall be issued. If, however, such Work is not found to be defective, Contractor shall be allowed an increase in the Contract Price or an extension of the Contract Time, or both, directly attributable to such uncovering, exposure, observation, inspection, testing and reconstruction if he makes a claim therefor as provided in I.11 Change of Contract Price, and I.12 Change of the Contract Time.

I.13.05 Owner May Stop the Work:

If the Work is defective or Contractor fails to supply sufficient skilled workmen or suitable materials or equipment, or if Contractor fails to make prompt payments to Subcontractors or for labor, materials or equipment, Owner may order Contractor to stop the Work, or any portion thereof, until the cause for such order has been eliminated; however, this right of Owner to sop the Work shall not give rise to any duty on the part of the Owner to exercise this right for the benefit of Contractor or any other party.

I.13.06 Correction or Removal of Defective Work:

If required by Engineer prior to approval of final payment, Contractor shall promptly, without cost to Owner and as specified by Engineer, either correct any defective Work, whether or not fabricated, installed, or completed, or if the Work has been rejected by Engineer, remove it from the site and replace it with non-defective Work. If Contractor does not correct such defective Work or remove and replace such rejected Work within reasonable time, all as specified in a written notice from Engineer, Owner may have the efficiency corrected or the rejected Work removed and replaced. All direct or indirect costs such correction or removal and replacement, including compensation for additional professional services, shall be paid by Contractor, and an appropriate deductive Change Order shall be issued.

Contractor shall also bear the expenses of making good all Work of others destroyed or damaged by his correction, removal, or replacement of his defective Work.

I.13.07 One Year Correction Period:

If, after the approval of final payment and prior to the expiration of one year after the date of Substantial Completion or such longer period of time as may be prescribed by law or by the terms of any applicable special guarantee, Contractor shall promptly, without cost to Owner and in accordance with Owners written instructions, either correct such defective Work, or, if it has been rejected by Owner, remove it from the site and replace it with non-defective Work. If

Contractor does not promptly comply with the terms of such instruction, Owner may have the defective Work corrected or the rejected Work removed and replaced, and all direct and indirect costs of such removal and replacement, including compensation for additional professional services, shall be paid by Contractor.

I.13.08 Acceptance of Defective Work:

If, instead of requiring correction or removal and replacement of defective Work, Owner (and, prior to approval of final payment, also Engineer) prefers to accept it, he may do so. In such case, if acceptance occurs prior to approval of final payment, a Change Order shall be issued incorporating reduction in the Contract Price; if the acceptance occurs after approval of final payment, and appropriate amount shall be paid by Contractor to Owner.

I.13.09 Neglected Work by Contractor:

If Contractor should fail to prosecute the Work in accordance with the Contract Documents, including any requirements of the progress schedule, Owner, after seven (7) days written notice to Contractor may, without prejudice to any other remedy he may have, make good such deficiencies and the cost thereof (including compensation for additional professional services) shall be charged against Contractor if Engineer approves such action, in which case a Change Order shall be issued incorporating the necessary revisions in the Contract Documents including an appropriate reduction in the Contract Price. If the payments then or thereafter due Contractor are not sufficient to cover such amount, Contractor shall pay the difference to Owner.

I.14. PAYMENTS AND COMPLETION

I.14.01 Schedules:

At least ten (10) days prior to submitting the first Application for a progress payment, Contractor shall submit a progress schedule, a final schedule of Shop Drawing submission and a schedule of values of the Work. These schedules shall be satisfactory in form and substance to Engineer. The schedule of values shall include quantities and unit prices aggregating the Contract Price, and shall subdivide the Work into component parts in sufficient detail to serve as the basis for progress payments during construction. Upon approval of the schedule of values by Engineer, it shall be incorporated into the form of Application for Payment furnished by Engineer.

I.14.02 Application for Progress Payment:

At least ten (10) days before each progress payment falls due (but not more often than once a month), Contractor shall submit to Engineer for review an application for payment filled out and signed by Contractor covering the Work completed as of the date of the application and accompanied by such data and schedules as Engineer may reasonably require. If payment is requested on the basis of materials and equipment not incorporated in the Work, but delivered and suitably stored at the site or at another location agreed to in writing, the Application for Payment shall also be accompanied by such data, satisfactory to Owner, as will establish Owner's title to the material and equipment and protect his interest therein, including applicable insurance. Each subsequent Application for Payment shall include an affidavit of Contractor stating that the previous progress payments received on account of the Work have been applied to discharge in full all of Contractor's obligations reflected in prior Applications for Payment.

The Contractor shall make application for progress payments as outlined in the Agreement of these Contract Documents.

I.14.03 Contractors Warranty of Title:

Contractor warrants and guarantees that title to all work, materials and equipment covered by any Application for Payment, whether incorporated in the project or not, will pass to Owner at the time of payment free and clear of all liens, claims, security interests and encumbrances (hereafter in these General Conditions referred to as "Liens").

I.14.04 Approval of Payments:

Engineer will, within ten (10) days after receipt of each Application for Payment, either indicate in writing the approval of payment and present the Application to Owner, or return the Application to Contractor indicating in writing his reasons for refusing to approve payment. In the latter case, Contractor may make the necessary corrections and resubmit the Application. After all signatures for approval are affixed to the payment request, the Owners representatives shall present the application to the appropriate boards and/or staff to process the payment per their standard practices.

Engineer's approval of any payment requested in an application for Payment will constitute a representation of him to Owner, based on Engineer's on site observations of the Work in progress as an experienced and qualified design professional and no his review of the Application for Payment and the accompanying data and schedules that the Work has progressed to the point indicated; that, to the best of his knowledge, information and belief, the quality of the Work is in accordance with the Contract Documents (subject to an evaluation for the Work as a functioning Project upon substantial Completion, to the results of any subsequent tests called for in the Contract Documents and any qualifications stated in his approval); and that Contractor is entitled to payment of the amount approved. However, by approving any such payment Engineer will not thereby be deemed to have represented that he made exhaustive or continuous on-site inspections to check the quality or the quantity of the Work, or that he has reviewed the means, methods, techniques, and procedures of construction, or that he has made any examination to ascertain how or for what purpose Contractor has used the monies paid or to be paid to him on account of the Contract Price, or that title to any Work, materials or equipment has passed to Owner free and clear of any Liens.

Engineer's approval of final payment will constitute an additional representation by him to Owner that the conditions precedent to Contractors being entitled to final payment as set forth in I.14.09, Approval of Final Payment, have been fulfilled.

Engineer may refuse to approve the whole or any part of any payment if, in his opinion, it would be incorrect to make such representations to Owner. He may also refuse to approve any such payment, or, because of later discovered evidence or the results of subsequent inspections or tests, nullify any such payment previously approved, to such extent as may be necessary in his opinion to protect Owner from loss because:

a. The Work is defective, or completed Work has been damaged requiring correction of replacement.

b. Claims or Liens have been filed or there is reasonable cause to believe such may be filed.

c. The Contract Price has been reduced because of Modifications.

d. Owner has been required to correct defective Work or complete the Work in accordance with I.13.08 Acceptance of Defective Work; or

e. Of unsatisfactory prosecution of the Work, including failure to furnish acceptable submittals or to cleanup.

I.14.05 Substantial Completion:

Prior to final payment, Contractor may, in writing to Owner and Engineer, certify that the entire Project is substantially complete and request that Engineer issue a certificate of substantial completion. Within a reasonable time thereafter, Owner, Contractor and Engineer shall make an inspection of the Project to determine the status of completion. If Engineer does not consider the Project substantially complete, he will notify Contractor in writing giving his reasons thereof. If Engineer considers the Project substantially complete, he will prepare and deliver to Owner a tentative certificate of Substantial Completion which shall fix the date of the Substantial Completion and the responsibilities between Owner and Contractor for maintenance, heat, and utilities. There shall be attached to the certificate a tentative list of items to be completed or corrected before final payment, and the certificate shall fix the time within which such items shall be completed or corrected, said time to be within the Contract Time. Owner shall have seven (7) days after receipt of the tentative certificate during which he may make written objection to Engineer as to any provisions of the certificate or attached list. If, after considering such objections, Engineer concludes that the Project is not substantially complete, he will within fourteen (14) days after submission of the tentative certificate to Owner notify Contractor in writing, stating his reasons therefor. If, after consideration of Owner's objections, Engineer considers the Project Substantially complete, he will within say fourteen (14) days execute and deliver to Owner and Contractor a definitive certificate of Substantial Completion (with a certificate as he believes justified after consideration of any objections from Owner).

Owner shall have the right to exclude Contractor from the Project after the date of Substantial Completion, by Owner shall allow Contractor reasonable access to complete or correct items not on the tentative list.

I.14.06 Partial Utilization:

Prior to final payment, Owner may request Contractor in writing to permit him to use a specified part of the Project which he believes he may use without significant interference with construction of the other parts of the Project. If Contractor agrees, he will certify to Owner an Engineer that said part of the Project is substantially complete and request Engineer to issue a certificate of Substantial Completion for that part of the Project. Within a reasonable time thereafter Owner, Contractor, and Engineer shall make an inspection of that part of the Project to determine its status of completion. If Engineer does not consider that it is substantially complete, he will notify Owner and Contractor in writing giving his reasons therefor. If Engineer considers that part of the Project to be substantially complete, he will execute and deliver to Owner and Contractor a certificate to that effect, fixing the date of Substantial Completion as to that part of the Project, attaching thereto a tentative list of items to be completed or corrected before final payment and fixing the responsibility between Owner and Contractor for maintenance, heat, and utilities as to that part of the Project. Owner shall have the right to

exclude Contractor from any Part of the Project which Engineer has so certified to be substantially complete, but Owner shall allow Contractor reasonable access to complete or correct items on the tentative list.

I.14.07 Final Inspection:

Upon written notice from Contractor that the Project is complete, Engineer will make a final inspection with Owner and Contractor and will notify Contractor in writing of all particulars in which this inspection reveals that the Work is incomplete or defective. Contractor shall immediately take such measures as are necessary to remedy such deficiencies.

I.14.08 Final Application for Payment:

After Contractor has completed all such corrections to the satisfaction of Engineer and delivered all maintenance and operating instructions, schedules, guarantees, Bonds, certificates of inspection and other documents—all as required by the Contract Documents, he may make application for final payment following the procedure for progress payments. The final Application for Payment shall be accompanied by such data and schedules as Engineer may reasonably require, together with complete and legally effective release or waivers (satisfactory to Owner) of all Liens arising out of the Contract Documents and the labor and services performed and the material and equipment furnished thereunder. In lieu thereof and as approved by Owner, Contractor may furnish receipts in full; and affidavit of Contractor that the releases of receipts include all labor, services, materials and equipment for which a Lien could be filed, and that all payrolls, material, and equipment bills, and other indebtedness connected with the Work for which Owner or his property might in any way be responsible, have been paid or otherwise satisfied; and consent of the Surety, if any, to final payment. If any Subcontractor material man, fabricator, or supplier fails to furnish a release or receipt in full, Contractor may furnish a Bond or other collateral satisfactory to Owner to indemnify him against any Lien.

I.14.09 Approval of Final Payment:

If, on the basis of his observation and review of the Work during construction, his final inspection and his review of the final Application for Payment, as required by the Contract Documents, Engineer is satisfied that the Work has been completed and Contractor has fulfilled all of his obligations under the Contract Documents, he will, within ten (10) days after receipt of the final Application for Payment, indicate in writing his approval of payment and present the Application to Owner for payment. Thereupon Engineer will give written notice to Owner and Contractor that the Work is acceptable subject to the provisions of I.14.11 Waiver of Claims. Otherwise, he will return the Application to Contractor, indicating in writing his reasons for refusing to approve final payment, in which case Contractor shall make the necessary corrections and resubmit the Application. After all signatures for approval are affixed to the payment request, the Owner's representative shall present the application to the appropriate board/staff to process the payment.

If after Substantial Completion of the Work final completion thereof is materially delayed through no fault of Contractor, and Engineer so confirms, Owner shall, upon certification by Engineer, and without terminating the Agreement, make payment of the balance due for that portion of the Work fully completed and accepted. If the remaining balance for Work not fully completed or corrected is less than the retainage stipulated in the Agreement, and if Bonds have

been furnished as required in I.05.01 Performance, Payment and Other Bonds, the written consent of the Surety to the payment of the balance due for the portion of the Work fully completed and accepted shall be submitted by the Contractor to the Engineer prior to certification of such payment. Such payment shall be made under the terms and conditions governing final payment, except that it shall not constitute a waiver of claims. The Owner shall not be required to make final payment to the Contractor until such time W.S. § I5-I-I3, I6-6-II6, and I6-6-II7, has been fulfilled. If no claims or liens have been filed within forty-one (41) day period following the first published advertisement in the newspaper of the Owner's choice that the project is complete and ready for final payment, the paperwork to pay the retainage will be delivered to the appropriate boards/staff to process the payment. Should any liens or claims be filed, retainage equal to the amount of the lien or claim will be held until satisfactory agreement is reached between the Owner, Contractor, and Contractor's surety. All warranties and guarantees from the Contractor, Subcontractors, suppliers, manufacturers, etc. shall be delivered to the Owner and be of acceptable form and content as determined by the Owner before final payment is made.

I.14.10 Contractors Continuing Obligation:

Contractors' obligation to perform the Work and complete the Project in accordance with the Contract Documents shall be absolute. Neither approval of any progress or final payment by Engineer, nor the issuance of a certificate of Substantial Completion, nor any payment by Owner to Contractor under the Contract Documents, nor any use or occupancy of the Project or any part thereof by Owner, nor any act of acceptance by Owner, nor any failure to do so, nor any correction of defective Work by Owner shall constitute an acceptance of Work not in accordance with the Contract Documents.

I.14.11 Waiver of Claims:

The making and acceptance of final payment shall constitute:

a. A waiver of all claims by Owner against Contractor other than those arising from unsettled Liens, from defective work appearing after final inspection pursuant to I.14.07, Final Inspection, or from failure to comply with the requirements of the Contract Documents or the terms of any special guarantees specified therein; and,

b. A waiver of all claims by Contractor against Owner.

I.15. SUSPENSION OF WORK AND TERMINATION

I.15.01 Owner May Suspend Work:

Owner may, at any time and without cause, suspend the Work or any portion thereof for a period of not more than ninety (90) days by notice in writing to Contractor and Engineer which shall fix the date on which Work shall be resumed. Contractor shall resume the Work on the date so fixed. Contractor will be allowed an increase in the Contract Price or an extension of the Contract Time, or both, directly attributable to any suspension if he makes a claim therefor as provided in I.11 Change of the Contract Price, and I.12, Change of the Contract Time.

I.15.02 Owner May Terminate:

If Contractor is adjudged a bankrupt or insolvent, or if he makes a general assignment for the benefit of his creditors, or if a trustee or receiver is appointed for Contractor or for any of his property, or if he files a petition to take advantage of any debtor's act, or to reorganize under the bankruptcy or similar laws, or if he repeatedly fails to supply sufficient skilled workmen or suitable materials or equipment, or if he repeatedly fails to make prompt payments to Subcontractors or for labor, materials or equipment or if he disregards laws, ordinances, rules, regulations or orders of any public body having jurisdiction, or if he disregards the authority of Engineer, or if he otherwise violates any provision of the Contract Documents, then Owner may, without prejudice to any other right or remedy and after giving Contractor and his Surety seven (7) days written notice, terminate the services of Contractor and take possession of the Project and of all materials, equipment, tools, construction equipment and machinery thereon owned by Contractor, and finish the Work by whatever method he may deem expedient. In such case Contractor shall not be entitled to receive any further payment until the Work is finished. If the unpaid balance of the Contract Price exceeds the direct and indirect costs of completing the Project, including compensation for additional professional services, such excess shall be paid to Contractor. If such costs exceed such unpaid balance, Contractor shall pay the difference to Owner. Such costs incurred by Owner shall be determined by Engineer and incorporated in a Change Order.

Where Contractors services have been so terminated by Owner, said termination shall not affect any rights of Owner against Contractor then existing or which may thereafter accrue. Any retention or payment of monies by Owner due Contractor will not release Contractor from liability.

Upon seven (7) days written notice to Contractor and Engineer, Owner may, without cause and without prejudice to any other right or remedy, elect to abandon the Project and terminate the Agreement. In such case, Contractor shall be paid for all Work executed and any expense sustained plus a reasonable profit.

I.15.03 Contractor May Stop Work or Terminate:

If, through no act or fault of Contractor, the Work is suspended for a period of more than ninety (90) days by Owner, or under an order of court or other public authority, or Engineer fails to act on any Application for Payment within thirty (30) days after it is submitted, or Owner fails to pay Contractor any sum approved by Engineer, or awarded by arbitrators within thirty (30) days of its approval and presentation, then Contractor may, upon seven (7) days written notice to Owner and Engineer, terminate the Agreement and recover from Owner payment for all Work executed and any expense sustained plus a reasonable profit. In addition and in lieu of terminating the Agreement, if Engineer has failed to act on an Application for Payment or Owner has failed to make any payments as aforesaid, Contractor may upon seven (7) days' notice to Owner and Engineer stop the Work until he has been paid all amounts that are due.

I.16. <u>MISCELLANEOUS</u>

I.16.01 Giving Notice:

Whenever any provision of the Contract Documents requires the giving of written notice it shall be deemed to have validly given if delivered in person to the individual or to a member of the firm or to an officer of the corporation for whom it is intended, or if delivered at or sent by

registered or certified mail, postage prepaid, to the last business address known to him who gives the notice.

I.16.02 Computation of Time:

When any period of time is referred to in the Contract Documents by days, it shall be computed to exclude the first and include the last day of such period. If the last day of any such period falls on a Saturday, Sunday, or on a day made a legal holiday by the law of the applicable jurisdiction, such day shall be omitted from the computation.

I.16.03 General:

All specifications, Drawings and copies thereof furnished by Engineer shall not be used on another Project, and, with the exception of those sets which have been signed in connection with the execution of the Agreement, shall be returned to him on request upon completion of the Project.

The duties and obligations imposed by these General Conditions and the rights and remedies available hereunder, and, in particular but without limitation, the warranties, guarantees and obligations imposed upon Contractor by I.06.15 Indemnifications, paragraph one; I.13 Warranty and Guarantee; I.13.07 One year Correction Period; and I.14.03, Contractors Warranty of Title; and the rights and remedies available to Owner and Engineer thereunder, shall be in addition to and shall not be construed in any way as a limitation of, any rights and remedies available to them which are otherwise imposed or available by law, by special guarantee or by provisions of the Contract Documents.

The Contract Documents shall be governed by the law of the place of the Project.

I.16.04 Samples, Tests Cited, Specifications and Abbreviations:

Whenever the following abbreviations are used in these specifications or on the respective plans, they shall be construed the same as the respective expressions represented and unless otherwise modified, the tests will be in accordance with the most recent citied standard methods which are current on the date of advertisement for bid.

ACI..... American Concrete Institute

AGC.....Associated General Contractors of Wyoming

AIA .....American Institute of Architects

ANSI .....American National Standards Institute

ARA.....American Railway Association

ASTM.....American Society for Testing and Materials

AWWA.....American Water Works Association

FHWA.....Federal Highway Administration

WYDOT..... Wyoming Department of Transportation

WPWSS..... Wyoming Public Works Standard Specifications

Part VII Supplementary Conditions

The following supplemental conditions are hereby made a part of the Contract Documents and supplement or supersede any articles of these specifications. Any subsequent addenda issued after the contract documents have been issued to bidders shall supplement or supersede any articles of these specifications and shall be made a part of the contract documents. The Special Provisions shall supplement or supersede these Supplemental Conditions.

PROJECT SITE

The Project area is located in Clear Creek Park, 251 Southwest Drive, Cheyenne, WY 82001

TIME FOR COMPLETION

The Work which the Contractor is required to perform under this Contract shall be commenced at the time stipulated by the Owner in the Notice to Proceed to the Contractor and shall be completed within the number of calendar days stated in ARTICLE 3 of the Agreement, from and including the date specified in the Notice to Proceed. Time will not be counted when the Owner due to acts of God, winter shutdown, and suspensions directed by the Owner officially suspends the project.

LIQUIDATED DAMAGES

For each calendar day that any Work shall remain uncompleted after the Contract time specified for the completion of the Work provided for in the contract, the following liquidated damage charges will be deducted from any money due the Contractor:

ORIGINAL CONTRACT AMOUNT		LIQUIDATED DAMAGE CHARGE
From more than:	to and including	Charge per calendar day:
($)	($)	($)
0.00	25,000.00	250.00
25,000.00	50,000.00	500.00
50,000.00	100,000.00	1,000.00
100,000.00	500,000.00	1,500.00
Over	500,000.00	2,000.00

Permitting the Contractor to continue and finish the Work or any part of it after the time fixed for its completion, or after the use of additional contract time, will in no way constitute a waiver on the part of the Owner to any of its rights under the Contract. Unless otherwise provided in the Contract, liquidated damage charges will be calculated in accordance with the table. All time in excess of the required Contract time will be calculated on a calendar day basis.

CONTRACT DOCUMENTS

The Owner will furnish to the Contractor, without charge, four (4) copies of the contract documents including technical specifications and drawings. Additional copies requested by the Contractor will be furnished at cost.

CONTRACTOR'S LICENSE

Where required, the Contractor and Subcontractors shall hold the appropriate classification of Contractors License.

JOB OFFICES AND STAGING AREA

The Contractor and Subcontractors may maintain such office and storage facilities on the site as are necessary for the proper conduct of the Work. These shall be located so as to cause no interference to any Work to be performed on the site, adjacent businesses, and properties, or to vehicular traffic. The Owner and the Engineer shall be consulted with regard to locations.

Upon completion of the improvements, or as directed by the Owner, the Contractor shall remove all such temporary structures and facilities from the site. Such temporary structures and facilities shall become the property of the Contractor. The Contractor shall leave the site of the Work in the condition required by the contract.

PARTIAL USE OF SITE IMPROVEMENTS

The OWNER may, at its discretion, give notice to the Contractor and place in use those sections of the improvements which have been completed, inspected, and can be accepted as complying with the contract documents and if, in the opinion of the Owner, each section is reasonably safe, fit, and convenient for the use and accommodation for which it was intended, provided:

a. The use of such sections of the improvements shall in no way impede the completion of the remainder of the Work by the Contractor.

b. The Contractor will not be responsible for any damages or maintenance costs due directly to the use of such sections.

c. The use of such sections shall in no way relieve the Contractor of liability arising from having used defective materials or poor workmanship.

d. Any guarantee period shall not commence until the date of the final acceptance of all Work which the Contractor is required to construct under this contract.

PROJECT RECORD DOCUMENTS

The Contractor shall maintain at the job site one copy of all contract and project documents, each portion of which shall be clearly marked "Project Record Copy." These documents, including drawings, specifications, addenda, approved shop drawings, change orders, field orders, other contract modifications, and other approved documents submitted by the Contractor in compliance with various sections of the Contract Documents, shall be maintained in good condition, available at all times for inspection by the Owner, and not used for construction purposes.

The Contractor shall mark up the most appropriate document to show significant changes made during construction progress and significant detail not shown in the original Contract Documents. This information shall include, but not be limited to, location of underground utilities and appurtenances referenced to permanent surface improvements, and location of internal utilities and appurtenances concealed in building structures referenced to visible and accessible features of structures.

The Contractor shall keep the project record documents current and not permanently conceal any Work until required information has been recorded. Upon completion of the project and prior to final acceptance, the Contractor shall submit the marked-up set of project record documents to the Engineer.

GENERAL TRAFFIC REQUIREMENTS

The Contractor shall provide adequate signs, barricades, lights, flares, and flaggers, and take all necessary precautions to prevent accident or injury and to minimize inconvenience to the public during the progress of the Work. All traffic control or other protective devices shall be installed and maintained in accordance with the Manual on Uniform Traffic Control Devices (MUTCD), current edition, or in conformance with the applicable requirements of the authority having jurisdiction in such matters. Material stored on or adjacent to public streets shall not obstruct or inconvenience the traveling public.

Streets, driveways, or other access points shall not be closed without the prior consent of the Owner, Engineer, and proper governmental authorities. The Contractor shall notify affected property Owners, the Owner, and the Engineer at least forty-eight (48) hours in advance of any proposed closure for construction operations.

The Contractor shall submit a traffic control plan to the Engineer at the Pre-Construction Conference. The submitted traffic control plan shall conform to the latest MUTCD traffic control standard and details. The Contractor will coordinate the plan with and secure the approval of the Owner and Engineer before Work begins. The plan shall indicate location and type of signs, cones, flashers, flagging, reflective barricades, and all other devices necessary for the proper protection of the area of the Work.

EXISTING ROADWAYS

The Contractor shall take all necessary precautions to protect all underground facilities affected by the Contractors operations, regardless of the ownership of the facilities. Any existing improvements or facilities damaged by the Contractors operations in the performance of the Work under this Agreement shall be repaired or replaced by and at the expense of the Contractor to the satisfaction of the facility owner.

The Contractor shall be responsible for the preservation and maintenance of all existing roadways affected but not directly disturbed by the Work. The Contractor shall repair, replace, or clean any roadway indirectly affected by his operations during the course of the project. Such Work shall be accomplished by and at the expense of the Contractor without reimbursement by the Owner.

PROJECT OBSERVATION

It is expressly understood and agreed that the Owner and the Engineer shall have the right under this Agreement to observe and review the Work and operations of the Contractor. However, such observation and review of the Work and operations shall not relieve the Contractor of any responsibilities, obligations, or covenants hereunder, and the Contractor shall be responsible for and save harmless the Owner and the Engineer and their respective representatives from all suits, actions, or claims of any character brought on account of any injuries or damages sustained by any person or property in consequence of any neglect in safeguarding the Work, observing safety standards or regulations, or otherwise, or through the use of unsafe or unacceptable materials in the construction or completion of the project, or the Contractors failure to comply with any law, ordinance, or regulation.

FINAL CLEANUP

The Contractor shall clean all street and other areas affected by construction, removing all loose surface materials. The Contractor shall clean up and dispose of all piles of excess excavation, rocks, rubbish, or other debris. Damage to any areas by the Contractor will be repaired or replaced by the Contractor at

no expense to the Owner. No extra compensation will be allowed for final cleaning of the site, but the cost thereof shall be included in the unit price bid for other items in the Proposal. If Work is suspended for any reason, the Contractor will be required, at the Contractors expense, prior to shut down, to provide for the public's safety and use as directed by the Engineer.

SAMPLES, TEST, CITED SPECIFICATIONS

All material will be inspected, tested, and accepted before incorporation into the Work. Any Work in which untested and unacceptable materials are used without approval or written permission shall be performed at the Contractors risk and may be considered as unacceptable and unauthorized, and will not be paid for; and if directed by the Engineer, shall be removed at the Contractors expense.

Unless otherwise modified, tests in accordance with the most recent cited standard methods of AASHTO or ASTM, approved AASHTO Interim Specifications, or ASTM Tentative Specifications, which are current on the date of Advertisement for Bids, will be made by and at the expense of the Contractor. Samples will be taken, and tests will be made by a qualified Geotechnical Engineer. All materials are subject to inspection, test, and either acceptance or rejection at any time prior to incorporation into the Work. The Contractor shall furnish copies of all tests to the Engineer. The Contractor shall coordinate with the Engineer for timely scheduling for samples and testing.

Part VIII Supplementary Conditions

SS - VARIOUS Supplemental Specifications ..... VIII-1 thru VIII-3

SUPPLEMENTARY SPECIFICATIONS 2014

The following are supplementary specifications and shall supplement, amend, and wherein conflict therewith, supersede various sections of the City of Cheyenne and Board of Public Utilities Construction Standards and Specifications 2014, and all Amendments to date.

When unit prices are not called for on the Bid Schedule no separate payment shall be made for these items to complete the project. Full compensation shall be considered as included in the prices paid for the various contract items and no additional compensation shall be allowed, therefore.

SECTION 01005: ABBREVIATIONS AND DEFINITIONS

2.02 Replace the definition of "Engineer" with the following: Engineer of Record.

SECTION 01054: CONTROL OF WORK

Add the following to subsection 1.04:

E. The contractor shall provide a project superintendent on-site at all times during construction activities. The superintendent shall be responsible for, but not limited to the following tasks:

1. Must be knowledgeable and familiar with plans, specs, addendums, and shop drawings.
2. Manage and oversee the construction activities of all sub-contractors on-site.
3. Review and approve all shop drawings including sub-contractors.
4. Review stakeout data, survey stakes and verify against the design plans prior to, and during, associated construction activity.
5. Obtain approval from the Owner/Engineer prior to beginning any force account efforts.
6. Provide an accurate weekly construction schedule.
7. Available during non-working hours for emergencies and or stormwater management erosion control times.
8. Substitution by permission only.

SECTION 01090: REFERENCES

In section 1.01 A. replace:

"In case of discrepancy, the following hierarchy shall be observed", with ***"In case of discrepancy, the most stringent and/or which benefits the Owner the most, shall govern"***.

Also remove items 1.01 A. 1-4.

SECTION 01330: SURVEY MONUMENTS AND CONTROL POINTS

Add the following:

1.01 B. This section also includes construction staking by the Contractor.

1.02 A. All project control points shall be verified horizontally and vertically with a level loop prior to beginning any construction activities and if a discrepancy is found, the Engineer shall be contacted immediately.

1.02 B. at the expense of the Contractor. This includes project control points and bench marks.

SECTION 01340: SUBMITTALS

Add the following to:

3.01 F. The Contractor shall thoroughly review approve the submittals against the plans and specifications for compliance prior to submittal to the Engineer. This includes submittals from all sub-contractors. Each submittal shall be numbered in sequential order and organized per each bid item with a cover letter detailing what the submittal is referring to. The cover letter shall also include the Contractor's approval signature. If these conditions have not been met, the submittals shall be rejected. The Owner\Engineer shall have at least four (4) working days to review the submittals and more time might be required depending on the nature of the submittal.

SECTION 01562: DUST CONTROL and CLEAN UP

Add the following to 3.02.C after work suspension: **and delay in payment**

SECTION 01563: EROSION CONTROL AND STORM WATER MANAGEMENT

Add or insert the following to:

301 D. The Contractor may have to add, and/or adjust erosion control features as required by the SWPPP, WYDPES Permit, regulatory inspector(s), Owner, Owner's representative, the Engineer and/or per construction activities.

3.01 E. Failure of the Contractor to comply with the Engineer's request for corrections, additions, of erosion control features shall result in a delay of payment and work suspension until corrected to the satisfaction of the Engineer.

SECTION 02210: EXCAVATION, EMBANKMENT, AND COMPACTION

Add or insert the following to:

2.04 A. The final decision of determining what "Muck Excavation" shall be determined by the Engineer.

2.06 Excavation Below Subgrade

A. In the event material is discovered that is not defined as Muck Excavation but is determined unworkable or unsuitable by the Engineer, the material shall be removed as determined by the Engineer.

3.02 A. The minimum compaction for the entire project shall be 95 percent court and other surfaced areas.

3.02 C. Frequency in areas to be developed outside the roadway shall be tested every 1,000 square feet horizontally at subgrade and base course elevations. Areas designated for a structure shall have the tests performed in the center of each structure location. Compaction tests are critical at detention pond berms as well.

3.04 A. Fine grading will not be paid separately and considered subsidiary.

3.05 D. No separate payment will be made for dewatering and shall be considered subsidiary.

SECTION 02231: AGGREGATE SUBBASE AND BASE COURSE

Add the following to:

4.01 A Method of Measurement: add "or square yard"

4.02 BASIS OF PAYMENT

Pay Item	Pay Unit
Crushed Base (___ inches thick)	Square Yard (SY)
Crushed Base – Grading 'W'-4"	Square Yard (SY)
Crushed Base – Grading 'W'-6"	Square Yard (SY)

SECTION 02280: TOPSOIL

Add or insert the following to:

3.01 B. or as shown in the plans.

3.04 D. Topsoil shall be placed evenly to the top back of curb, sidewalk, edge of surfacing, etc., to provide positive drainage as directed by the Engineer. If the topsoil subsides, additional topsoil will be added to compensate.

SECTION 02900: LANDSCAPING

Add the following:

3.01 A. 1. Topsoil shall be raked to provide positive drainage and placed evenly to the top back of curb, sidewalk, or adjacent surfacing. Additional topsoil shall be added to compensate for settling. Roots, rocks, and other debris shall be removed prior to seeding or placing sod.

SECTION 03340: CONCRETE SIDEWALKS, DRIVEWAY APPROACHES, CURB TURN FILLETS, VALLEY GUTTERS, AND MISCELLANEOUS NEW CONCRETE STRUCTURS

Add the following:

1.01 A. This section also includes handicap ramps.

Add the following:

4.02 A. Payment shall also include all materials, labor, and incidentals to restore existing areas adjacent to the Court to their original or better condition. This may include, but not limited to placing topsoil flush with new sidewalk, sod, seed, repairing sprinklers, cutting tree roots, etc. Payment shall also include efforts for curb cuts for handicap ramps.

4.02 C. Payment shall also include all efforts, materials, labor, and incidentals for handicap ramps, including, but not limited to, detectable warning plates. Payment shall also include all materials, labor, and incidentals to restore existing areas adjacent to the sidewalk to their original or better condition. This may include, but not limited to placing topsoil flush with new sidewalk, sod, seed, repairing sprinklers, cutting tree roots, etc.

Replace the following:

4.02 E. Payment shall be made under:

Pay Item	Pay Unit
Concrete Sidewalk – 4"	Square Yard (SY)
Concrete Pavement – 4"	Square Yard (SY)
Concrete Pavement – 4" (Reinforced)	Square Yard (SY)

Payment shall be made at the contract unit bid price for each item multiplied by the number of units installed.

Special Provisions

	Page #
Section 01010 Summary of Work	3
Section 01020 Administrative Instructions	7
Section 01030 Mobilization	1
Section 01035 Miscellaneous Force Account	1
Section 04002 Site Furnishings	3
Section 06800 Irrigation Adjustment	1
Section 06810 Basketball Court Surfacing (All Finishing Layers)	5
Section 06820 Basketball Court Markings	4
Section 06830 Basketball Hoop Assembly	2
Section 06840 8' Polyvinyl Coated Metal Picnic Table	1
Section 06850 Pickleball Court Surfacing (All Finishing Layers)	5
Section 06860 Pickleball Court Markings	4
Section 06870 Pickleball Net Assembly	2
Section 06880 10'H Vinyl Coated Chain Link Fence	2
Section 06890 4'W Chain Link Fence Gate	2

SECTION 01010

SUMMARY OF WORK

PART 1 GENERAL

Section 1.01 SUMMARY

A. Apply for, obtain, and pay for all permits and licenses necessary prior to performing any of the work. All CONTRACTORS who work in the COUNTY/CITY right-of-way must be licensed or franchised by the COUNTY/CITY. Plans shall be approved by the ENGINEER prior to issuance of right-of-way permits. Required permits are summarized in the plans, but may not be all inclusive, Contractor shall verify.

B. Comply with applicable codes and regulations of authorities having jurisdiction.

C. Field verifies dimensions indicated on drawings before fabricating or ordering materials. Do not scale plans and drawings.

D. Notify OWNER of existing conditions differing from those indicated on the plans. Verify the existence and location of underground utilities along the route of proposed work. Omission of an existing utility location on the drawings is not to be considered as its nonexistence. Inclusion of existing utility locations on the drawings is not to be considered as its definite location. Do not remove or alter existing utilities without prior written approval.

E. The Contract Documents are intended to provide the basis for proper completion of the work suitable for the intended use of OWNER. Anything not expressly set forth, but which is reasonably implied or necessary for proper performance of the project shall be included.

F. Portions of the Contract Documents are written in the imperative mode. Except where specifically intended otherwise, the subject of all imperative statements is CONTRACTOR. For example, "Furnish..." means "CONTRACTOR shall furnish...", "Provide...means the "CONTRACTOR shall provide...".

G. No change to these Standards and Specifications shall be considered unless approved in advance by the ENGINEER or through special provisions in the Contract Documents approved by the ENGINEER.

H. The Contractor shall warranty the completed work to be free from defects in workmanship or materials for a period of one (1) year after substantial completion. All work that fails or deteriorates during the first year shall be replaced under this warranty. The Contractor shall be responsible for all costs for material, equipment, labor, and/or traffic control for warranty work. Warranty work shall be completed in accordance with these specifications within thirty (30) days of written notification by the OWNER.

Section 1.02 WEATHER DAYS

For purposes of this project ten (10) adverse weather days have been included assuming work beginning March 1st, 2023, and Completion August 11th, 2023. To receive additional contract time the total number of adverse weather days must exceed the ten (10) days allotted for the contact

time prescribed. Adverse weather days shall be adjusted based on the contractor's schedule per Table 108.6.6-1 in the WYDOT Standard Specifications for Road and Bridge Construction 2010 Edition.

Section 1.03 COMPLETION

The targeted substantial completion dates are as follows:

Substantial Completion Date

Friday July 14th, 2023

For the purpose of assessing liquated damages, the project Substantial Completion Date implies that **ALL** work items on the project with the exception of landscaping components shall be completed.

For the purpose of assessing Final Completion Date liquidated damages, the project Final Completion date is as follows:

Final Completion Date:

Friday August 11th, 2023

Completion of all items, including punch-list items from **July 14th, 2023,** Substantial Completion.

Note liquidated damages are assessed on a calendar day basis based on contract dollar amount and will be deducted from the Contractor's monthly progress payments.

Section 1.04 CONSTRUCTION REQUIREMENTS

A. PROJECT WORK SCHEDULE: Prior to beginning any work on the project, the Contractor shall submit a work plan and progress schedule which is sufficiently detailed to show the sequence of each component of work required to complete the project within the contract time period and in the same manner specified in this Specification. Items which shall be shown include the beginning and ending dates of each component of work, the relationship of time required to complete each component to the duration of the project, and the production rates used to estimate the time required. Major components of work shall be shown even if they are not contract pay items (i.e. crushing surfacing material and deliver of pipe culverts, etc.).

1. An updated schedule shall be submitted at the beginning of each month on the first working day of that month showing the original schedule, any changes that have been made to the schedule and the progress to date of each component. Additional schedules shall be submitted earlier if changes on the project are made or as directed by the ENGINEER. Monthly partial payments will be withheld until a current work schedule is submitted.

2. The CONTACTOR is advised that Laramie County will close Clear Creek Park to the public for renting and/ or general use during the construction period defined by the schedule furnished. Ensure the schedule details periods that the general public would be able to maintain access to the park. Liquidated damages in the amount of $250.00 per day shall be assessed for utilizing working days during self-imposed public access milestones.

B. Access of traffic to local residents, businesses, adjacent roads, and driveways shall be provided and maintained throughout the project at all times unless the Contractor obtains written permission from the Landowner and/ or Jurisdictional authority allowing a restriction of access in order to facilitate construction. A copy of the written permission will be submitted to the ENGINEER prior to restricting the access.

END OF SECTION 01010

SECTION 01020
ADMINISTRATIVE INSTRUCTIONS

Section 1.01 DESCRIPTION OF WORK

A. The work to be performed under this contract consists of furnishing materials, equipment, tools, labor and other work or items incidental therefore performing all work as required by the Contract in accordance with the plans, specifications, and Standard Specifications all of which are made a part hereof.

Section 1.02 CONTRACT BOND

A. At the time of the execution of the contract, the successful bidder shall furnish a surety bond or bonds in a sum equal to the full amount of the contract, unless otherwise approved by the Owner. The form of the bonds and the security shall be acceptable to the Owner.

B. The cost of contract bonds is included as a bid item in the contract. To receive payment for the contract bond bid item, the successful bidder shall comply with the following requirements:

C. Subsequent to award of the contract and satisfactory compliance with the above, the successful bidder shall submit a written request to the Engineer in charge of the project requesting payment of the contract bond bid item. The successful bidder shall include with this written request, a statement from the insuring firm, indicating the cost of the contract bond based on the preliminary estimate of the cost of the contract and how that cost will be adjusted based on the final contract cost.

D. Payment for the cost of the contract bond will be paid as a partial payment based on the contract bid item, or the cost of the bond based on the preliminary estimate of the cost of the contract, whichever is less. This payment will be adjusted upon completion of the project, based on the final cost of the contract. Contract bond payment will be the contract bid price or preliminary cost of the bond, whichever is less, adjusted by an appropriate amount using rates provided by the bonding company for adjustment when the initial request for payment is made.

E. Payment will be made under:

Pay Item	Pay Unit
Contract Bond and Insurance	Lump Sum

Section 1.03 SUBCONTRACTORS AND SUPPLIERS

A. A list of subcontractors and suppliers that will be involved with this project shall be given to the Engineer or Engineer's Representative for review and approval with the bid proposal. This list must be received by the Engineer before the contracts may be signed.

Section 1.04 PRE-CONSTRUCTION CONFERENCE

A. Prior to the start of construction, the Contractor(s), Engineer (or Engineer's Representative), all subcontractors, Utility Department, Petroleum Companies, Telephone Company, Gas Company, Cable Television, and other interested parties shall attend a pre-construction conference; time, place, and date to be determined after awarding the

Contract(s). Subsequently a representative of the contractor shall attend (if requested) a weekly conference to review progress and discuss any problems that may be incurred.

Section 1.05 SANITATION FACILITIES

A. The Contractor shall provide and maintain in a neat and sanitary condition such accommodations for the use of his employees as may be necessary to comply with the requirements and regulations as enforced by the County Health Officer. The Contractor shall not allow such facilities to become a public nuisance.

B. All expenses incurred in supplying access, parking, and sanitation facilities shall be considered as incidental to the project and no compensation will be made.

Section 1.06 NON-DISCRIMINATION IN EMPLOYMENT

A. Contracts for work under this proposal will obligate the Contractor and Subcontractor not to discriminate in employment practices.

Section 1.07 WAGE COMPLIANCE REQUIREMENTS

A. W.S. 16-6-110 requires (a) No person shall require laborers, workmen or mechanics to work more than eight (8) hours in any one (1) calendar day or forty (40) hours in any one (1) week upon any public works of the state or any of its political subdivisions except as hereafter authorized. An employee may agree to work more than eight (8) hours per day or more than forty (40) hours in any week provided the employee shall be paid at the rate of one and one-half (1½) times the regularly established hourly rate for all work in excess of forty (40) hours in any one (1) week.

B. Wyoming State Statute Requires Payment Of Overtime On Hours In Excess Of Forty (40) Hours In Any One (1) Week.

C. The contractor is expected to maintain payroll records and pertinent information records for audit or litigation purposes. The OWNER or Engineer may request certified payrolls for the purpose of reviewing wage grievances however, no payrolls will be required to be submitted for the project.

Section 1.08 WORKMEN SAFETY

A. Each employee shall work in a safe manner. It is the responsibility of the Contractor to have trained or instructed his employees and supervisors in the safe way to perform their assigned tasks.

B. It is the duty of the Contractor to comply with the current Wyoming Occupational Health and Safety Rules and Regulations for Construction published by the Wyoming Occupational Health and Safety Commission and all other applicable Occupational Safety and Health Administration rules and regulations.

Section 1.09 EXCAVATED MATERIAL SPOIL AREA/WASTE SITE

A. The Contractor shall conform to the Standard Specification in regard to waste sites.

B. The existing pavement, unsuitable subgrade materials, and excess excavation shall be lawfully disposed of at sites obtained by the Contractor.

C. The Contractor shall notify the Engineer at the pre-construction conference as to the location selected to dispose of the excess, waste and unsuitable materials and the haul route for the removal from the project.

D. Lost and spilled materials onto the route taken by the Contractor shall be promptly removed. The route shall be maintained as deemed necessary by the Engineer by the use of water trucks, motor grader, power, hand labor and related equipment to alleviate the problem of lost spills, tracked mud, and dust control. Prompt restoration of the route is necessary.

E. No extra compensation shall be allowed for the disposal of the waste and surplus material; including but not exclusively; dump fees, extra haul distances and time, changed haul routes, and haul road maintenance. The cost shall be included in other items of work in the proposal.

Section 1.10 DUST AND MUD CONTROL

A. The Contractor shall be responsible for controlling dust and mud within the project limits and on any street or road which is utilized by his equipment for the duration of the project.

B. The Contractor shall be prepared to use watering trucks, power sweepers and other pieces of equipment as deemed necessary by the Engineer or Engineer's Representative, to avoid creating a nuisance.

C. Dust and mud control shall be considered as incidental to the project and no compensation will be paid, therefore.

D. Complaints on dust, mud, or unsafe practices and/or property damage to private ownership will be transmitted to the Contractor and prompt action in correcting will be required. Written notice of correction of complaint items will be called for should repetitive complaints be received by the City.

Section 1.11 STATE SALES TAX

A. The Contractor shall include in the unit prices bid any compensating tax that must be paid.

Section 1.12 DELIVERY OF TICKETS

A. All delivery tickets that are required for the purpose of calculating quantities for payment must be received by the Engineer or Engineer's Representative at the time of delivery. Batch tickets for all concrete are required and shall indicate the portions of all components that went into the specific load.

1. By Truck: Payment will not be made for delivery tickets which do not show type of material, gross weight, tare weight, truck number, and date. Delivery tickets shall utilize automatic printer systems.
2. Scale certification shall be submitted as early in the project as possible. In no case will materials weighed on non-certified scales be accepted for payment.

3. By Other Means: Method for measurement and payment for material brought to the site by any other means will be determined by a Contractor-Owner agreement before award of contract.

Section 1.13 SURVEY AND STAKEOUT

A. The Engineer or Engineer's Representative shall have the right to make reasonable changes in the grades as they are shown on the Drawings.

B. The Engineer will establish project horizontal and vertical control points; and perform all surveys necessary to compute project quantities. Staking will be provided by the Contactor. The Engineer will be available for consultation and interpretations for all of the staking operations.

C. The Contractor shall make all surveys that will be necessary for the proper construction. The Contractor shall be responsible for the preservation of all property pins, control points, offset line points and stakes. The Contractor shall also be responsible for any mistakes or damage resulting from the unnecessary loss or disturbances of control points, offset line points and stakes.

D. The Contractor shall arrange his work to allow 2 working days minimum advance notice for the Engineer to review the lines and grades of those stakes set for the next step of his operation to prevent work delays while waiting for review of construction stakes.

E. The Contractor shall call to the attention of the Engineer any control points or bench marks which may have been disturbed or which seems to be off line or grade.

F. In the case of the destruction, by the Contractor, of survey control points set by the Engineer, which require placement, the Contractor shall be charged with the resulting expense of replacement and shall be responsible for any mistakes or loss of time that may result from the survey point's loss or disturbance.

Section 1.14 EASEMENT AND RIGHT-OF-WAYS

A. The Owner will obtain all easements and franchises required for the project. Contractor shall limit his operation to the area obtained and shall not trespass on private property.

Section 1.15 LAND PROVIDED BY OWNER

A. The Owner may provide certain lands, as indicated in connection with the work under the contract together with the right of access to such lands. The Contractor shall not unreasonably encumber the premises with his equipment or materials.

Section 1.16 LAND PROVIDED BY CONTRACTOR

A. The Contractor shall provide with no liability to the Owner any additional land and access thereto not shown or described that may be required for temporary construction facilities or storage of materials. He shall construct all access roads, detour roads or other temporary works as required by his operations. The Contractor shall confine his equipment, storage of materials and operations of his workers to those areas shown and described and such additional areas as he may provide. Should the Contractor require additional area, he will obtain written consent and agreement from the landowner on which the Contractor chooses to expand his operation. A copy of this agreement must be furnished to the Engineer before permission will be granted or denied by the

Engineer to expand to additional land. The agreement, if accepted by the Engineer, must describe the activity for which the land will be used, how the area and roads will be cleaned up, retopsoiled, and seeded.

B. Prior to final payment the contractor shall furnish to the Engineer a written statement of approval/clearance from the landowner for those properties on which work, equipment, or material staging took place.

Section 1.17 RESTORATION OF STRUCTURES AND SURFACES

A. General: All construction work under this contract on right-of-ways, easements, over private property, or franchise, shall be confined to the limits of such easement, right-of-way, or franchise. All work shall be accomplished so as to cause the least amount of disturbance and a minimum amount of damage. The Contractor shall schedule his work so that trenches across easements shall not be left open on weekends or holidays, or be left open for more than twenty-four (24) hours. Trenches that will present a danger to vehicular or pedestrian traffic will be closed at the end of each day's work.

B. Structures: The Contractor shall remove such existing structures as may be necessary for the performance of the work and if required, shall rebuild the structures thus removed in as good a condition as found with minimum requirements as herein specified. He shall also repair all existing structures, which may be damaged as a result of the work under this contract.

C. Easements, Cultivated Areas, and Other Surface Improvements: All cultivated areas, either agricultural or lawns, and other surface improvements which are damaged by actions of the Contractor shall be restored as nearly as possible to their original condition. Prior to excavation on an easement or private right-of-way, the Contractor shall strip topsoil from the trench or construction area and stockpile it in such a manner that it may be replaced by him upon completion of construction. Ornamental trees and shrubbery shall be carefully removed, with the earth surrounding their roots, wrapped in burlap, and replanted in their original positions within twenty-four (24) hours. All shrubbery or trees destroyed or damaged shall be replaced by the Contractor with material of equal quality at no additional cost to the Owner. In the event that it is necessary to trench through any lawn areas, the sod shall be carefully cut and rolled and replaced after the trenches are backfilled. The lawn area shall then be cleaned, by sweeping or other means, of earth and debris. All fences, markers, mail boxes, or other temporary structures shall be removed by the Contractor and immediately replaced after the trench has been backfilled, in their original positions. The Contractor shall notify the Engineer or Engineer's Representative and property owner at least twenty-four (24) hours in advance of any work done on easements or private right-of-ways.

D. Roads: The Contractor shall assume all responsibility for restoration of the surface of all County and private (traveled ways) used by him and damaged.

Section 1.18 PROTECTION OF PEDESTRIAN AND VEHICULAR TRAFFIC

A. The Contractor shall take every precaution to protect vehicular and pedestrian traffic. Whenever, in the opinion of the Engineer or Engineer's Representative, the Contractor has not provided sufficient or proper safety precautions, the Contractor shall do so

immediately and to whatever extent the Engineer deems advisable. However, this provision shall not be construed as creating any duty on the part of the Engineer for traffic safety.

B. The posting of flagmen, advance warning signs, barricades, traffic cones, flashers, etc., shall be in accordance with the Wyoming Department of Transportation Standard Plans and Part VI of the current edition of the Federal Highway Administration "Manual on Uniform Traffic Control Devices for Streets and Highways."

Section 1.19 UTILITIES

A. The Contractor shall be responsible for requesting locates with the utility companies as to the location of such utilities, i.e., water service lines, valve boxes, sanitary sewer services, gas lines, underground telephone lines, etc. within the areas of work. The Contractor shall be solely responsible for any damage done to such utilities due to failure of preserving original utility locate marks or to properly protect them when their location is known.

B. Plans show the general horizontal location of gas, power, and telephone utilities within the project based on information provided by others. Failure to show the location of any utility on the plans shall not relieve the Contractor from the responsibilities above. The vertical verification and location of utilities shall be conducted by the Contractor by pot holing at random selected locations as requested by the Engineer prior to any major excavation for construction activities. It shall be solely the responsibility of the contractor to fully coordinate his work with the utility companies and to keep them informed of his construction activities so that these vital utilities are fully protected at all times.

Section 1.20 WATER

A. Obtaining, furnishing, and properly applying water for embankments, subgrades, surfacing covers, dust control, and landscaping is the responsibility of the Contractor.

B. Water required for compaction of embankments, subgrade and gravel courses may be obtained by Contractors source.

Section 1.21 MATERIAL TESTING AND QUALITY ASSURANCE

A. The Contractor shall hire an Independent Testing Laboratory to perform the project materials testing and quality assurance program on behalf of the Owner.

B. The Contractor will be responsible for scheduling testing. The Contractor shall give the Engineer adequate advance notice of testing. The Contractor's failure to provide adequate testing may result in delay of approval. The Contractor's scheduling of testing with an independent testing laboratory, without prior knowledge or approval of the Engineer, may result in project delays or retesting.

C. Retesting: Should the materials or standards fail to meet the quality assurance tests performed by the Independent Testing Laboratory; the Contractor shall pay the costs of all failing tests.

Section 1.22 AIR POLLUTION

A. The Contractor shall have informed himself of all applicable State Board of Health Requirements, and similar State or Federal requirements, pertaining to control of or abatement of air pollution. He shall have provided or be prepared to provide such air pollution control measures as are required to comply with the minimum standards established by such agencies.

Section 1.23 EXCESS MATERIAL OR FILL MATERIAL

A. It will be the Contractor's responsibility to remove from the project, all excess material or to import adequate fill material where needed.

Section 1.24 FINAL CLEAN-UP

A. The Contractor shall clean all areas affected by construction, removing all loose surface materials. Damage to any areas by the Contractor will be repaired or replaced by the Contractor at no expense to the County. This cleanup shall include brooming of pavements prior to opening for traffic.

Section 1.25 SITE SAFETY

A. Site Safety measures will be required on this project. Traffic Control will be provided by the Contractor to protect the Public, City, and Contractor's forces from construction activities. All safety barricades, lighting, barrier fencing, and other materials to cordon off and protect the public from the construction activities will be provided by the Contractor. Proposed site safety and construction site protection will be coordinated with the City of Cheyenne, and the Engineer.

B. The Contractor shall perform all work in a manner which will not cause undue exposure of motorists, pedestrians, and the general public to hazardous conditions. Temporary, 36 inch fluorescent plastic fencing shall be sturdily erected and continuously maintained around all excavations, trenches, and other hazardous sites.

END OF SECTION 01020

SECTION 01030
MOBILIZATION

PART 1 GENERAL

Section 1.01 GENERAL

A. Payment will be made for mobilization to cover the costs of preparatory work and operations including but not limited to those necessary for the movement of personnel, equipment, supplies and incidentals to the project site; for the establishment of all field offices, storage buildings, and other facilities necessary for the work on the project, Contractor's construction surveying, Contractor's quality control testing, and for all other work and operations which must be performed, or costs incurred prior to beginning work on the various items on the project.

PART 2 PRODUCTS (Not Used)

PART 3 EXECUTION (Not Used)

PART 4 METHOD OF MEASUREMENT AND BASIS OF PAYMENT

A. Payment for mobilization will be made with the monthly estimate based on the percentage of the original contract amount earned in accordance with the following:

B. On the first estimate following award, 10 percent of the Mobilization pay item or 1% of the original contract amount, whichever is less will be paid.

C. Subsequently, when the percentage of the original contract amount shown is earned, the percentage of the contract lump-sum price for mobilization will be paid.

PERCENTAGE OF ORIGINAL CONTRACT AMOUNT EARNED	PERCENTAGE OF LUMP-SUM PRICE FOR MOBILIZATION
5	25
10	50
25	60
50	70
70	100

D. Upon substantial completion of work on the project, payment on any amount bid for mobilization in excess of 10 percent of the original contract amount will be paid.

E. The total sum of all payments will not exceed the original contract amount bid for Mobilization, regardless of the fact that the contractor may have shut down work on the project or moved equipment away from the project and then back again for their operations.

Payment will be made under:

Pay Item	Pay Unit
Mobilization	Lump Sum

END OF SECTION 01030

SECTION 01035
MISCELLANEOUS FORCE ACCOUNT

PART 1 GENERAL

Any extra work, additions, deletions, or revisions in the work will be authorized by written contract modification or change orders. The Engineer may authorize minor changes or alterations in the work not involving extra cost and not inconsistent with the overall intent of the Contract Documents in the form of a Field Order.

All Force Account work shall be approved and issued via a field order by the engineer prior to starting work.

The Owner or his representative may direct the contractor to perform work under force account. Payment to the Contractor for such work is compensation-in-full and will be determined as follows:

Section 1.01 FORCE ACCOUNT

A. Labor. For the time that workers and their immediate working foreman are engaged specifically and solely in force account work, wages plus 66% will be paid to cover overhead, property damage and liability insurance, workers' compensation insurance premiums, unemployment insurance contributions, and social security taxes. Additional any fringe benefits such health care, pension, and other bona fide fringe benefits applicable to the personnel involved will be paid at cost.

B. Materials. Actual cost of materials approved for use by engineer and incorporated into the work, including transportation charges (exclusive of equipment rentals), plus 15%. No payment will be authorized without receipt of invoices substantiating the material and transportation costs.

C. Equipment. For time that rental or other equipment is engaged specifically and solely in force account work, the Owner will pay equipment hours to the nearest ½ hour each day. Equipment rental rates shall be furnished and approved by the Owner prior to use in any force account work.

   At the Pre-Construction Conference, the Contractor and subcontractors shall submit hourly rates for equipment types and personnel classifications intended to be used on the project.

D. Sub-contractor Work. If the Engineer or Owners representative require Force Account to be completed by sub-contractor, it shall be paid per Section 01035, Force Account. As reimbursement for its own administrative expenses, the contractor may add 5 percent to the amount of the sub-contractor's billing for the work.

E. Invoice Work. If the engineer, owner, and contractor agree an item of work is minor in nature or requires a specialist, the work may be paid for based on a contractor or sub-contractor invoice. If work is agreed to be paid for under invoice work, invoices shall be itemized by labor, material, and equipment rental costs. As full reimbursement for its own administrative expenses, the contractor may add 5 percent to a sub-contractor's invoice.

Section 1.02 BASIS OF PAYMENT

Pay Item	Pay Unit
Force Account	$$

END OF SECTION 01035

SECTION 04002

SITE FURNISHINGS

PART 1 GENERAL

Section 1.01 SUMMARY

A. Furnish all labor, materials, equipment, supplies, and perform all necessary operations required to design, and install site furnishings for the project. The contractor shall ensure that the design, furnishings, and installation meet or exceed the specifications and preliminary drawings outlined in the construction documents.

Any minor items of labor or materials not specifically noted in this Special Provision or on the plans which is necessary for the proper completion of the work described will be considered incidental and are to be included in the contract.

Section 1.02 SHOP DRAWINGS

A. Provide shop drawings signed and sealed by a Wyoming registered professional engineer for any foundations required for the play equipment structures shown on preliminary drawings.

B. The preliminary drawings shown in construction documents are intended to be used as a guide concept for bidding purposes. Alternative designs are encouraged.

C. Submittals shall be in accordance with Section 01340 of the City of Cheyenne and Board of Public Utilities Construction Specification 2014 as amended in these documents.

D. Submittals that do not meet or exceed minimum specifications will be rejected.

Section 1.03 QUALITY ASSURANCE

A. Conform to applicable code for submission of design calculations as required for acquiring permits.

B. The City of Cheyenne Plan Review Information and Code Information is provided in Appendix C.

C. The site specific geotechnical report is provided in Appendix A.

PART 2 PRODUCTS

Section 2.01 PICNIC TABLES

A. 8 foot or 96 inch thermoplastic coated portable rectangular picnic table.

B. Table tops and seat boards: Mesh shall be constructed of 11 gauge perforated metal top with a staggered pattern of approximately 3/8 inch diameter at 5/8 inch apart on center maximum.

1. All steel shall be thermoplastic coating color to be approved by the OWNER. The typical thermoplastic coating process shall consist of dipping pre-galvanized dipped into a hot bath of high-density polyethylene with UV and colorfast protective additives.

C. Frame: 2-3/8 inch O.D. powder-coated steel pipe minimum that conforms to ASTM A-135 and ASTM A-500. Frame color shall be black or as approved by the OWNER.

D. Table dimension shall generally be as outlined below for a traditional outdoor picnic table.

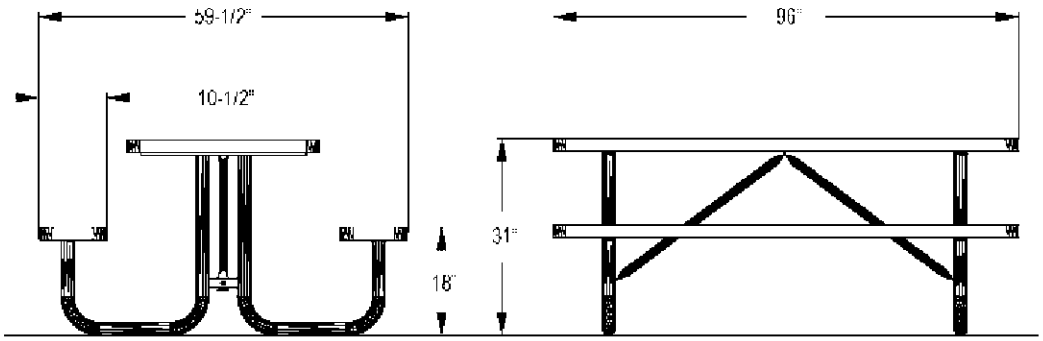

E. One universal access ADA approved overhang table shall be furnished with the traditional standard picnic table generally meeting the dimensions .

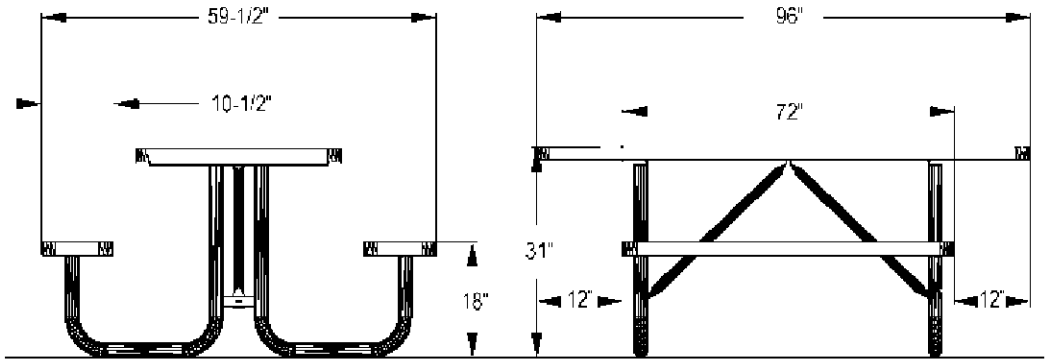

Section 2.02 WARRANTIES

A. In addition to the manufactures warranty for the specific material components of the structures, the contractor shall warrant against defects in materials and workmanship for a period of not less than two (2) years from date of final acceptance.

PART 3 EXECUTION

Section 3.01 INSTALLATION

A. All components to be installed according to the plan sets and/or manufacturer's instructions.

B. Any minor items of labor or materials not specifically noted in this Special Provision or on the plans which is necessary for the proper completion of the work described will be

considered incidental and are to be included in the contract.

Section 3.02 OPERATION & MAINTENANCE MANUALS

A. Operations & Maintenance manuals shall be provided by the manufacturers to the OWNER and ENGINEER.

PART 4 METHOD OF MEASUREMENT AND BASIS OF PAYMENT

Section 4.01 METHOD OF MEASUREMENT BASIS OF PAYMENT

A. Payment shall be for each type of structure, and shall constitute full compensation for all materials, equipment, tools, and labor for design and installation of each respective structure.

B. Payment shall be made as follows:

Pay Item	Pay Unit
8' Coated Picnic Table	EA

END OF SECTION 04002

SECTION 06800

IRRIGATION ADJUSTMENT

PART 1 GENERAL

Section 1.01 SUMMARY

A. This work consists of furnishing all labor, materials, equipment, supplies, to perform all necessary operations required to remove, relocate and/or replace existing irrigation facilities within the project area as specified on the Irrigation Adjustments plan. Any minor items of labor or materials not specifically noted in this Special Provision or on the plans which is necessary for the proper completion of the work described will be considered incidental and are to be included in the contract.

PART 2 PRODUCTS

Section 2.02 IRRIGATION COMPONENTS

A. Proposed irrigation system should generally follow the layout shown on the Irrigation Adjustments sheet, however this layout can be adjusted based on verification of existing layout. Any layout differences from that shown on the Irrigation Adjustments plan shall be done so as to ensure that all existing and proposed lawn areas surrounding the proposed improvements are adequately irrigated.

B. Irrigation components including but not limited to Polyethylene pipe, sprinkler heads, valves, and valve boxes shall be replaced, added, or disposed of on a as needed basis so as to create an irrigation system that adequately ensures the irrigation of all disturbed landscaping areas surrounding the proposed hardscape improvements.

C. Existing irrigation components can be salvaged given that are free of defects after removal and installation to their proposed locations.

D. Any irrigation components needing replacement, or additional irrigation components required for the proposed layout, shall match brand/model of the similar existing components when possible; when not possible, components of similar characteristics and compatibility shall be acceptable.

PART 3 EXECUTION (Not Used)

PART 4 METHOD OF MEASUREMENT AND BASIS OF PAYMENT

Section 4.01 METHOD OF MEASUREMENT

A. No measurement of the Irrigation Adjustment package shall be taken.

Section 4.02 BASIS OF PAYMENT

A. Payment for the Irrigation Adjustment shall be by Lump Sum (LS). Payment shall include all materials, equipment, supplies, to perform all necessary operations required to relocate and/or install all irrigation components shown on the Irrigation Adjustment plan, as well as all labor required for completion of the Irrigation Adjustment.

B.

Pay Item	Pay Unit
Irrigation Adjustment	LS

END OF SECTION 06800

SECTION 06810

BASKETBALL COURT SURFACING (ALL FINISHING LAYERS)

PART 1 GENERAL

Section 1.01 SUMMARY

A. This work consists of furnishing all labor, materials, equipment, supplies, to perform all necessary operations required to install surfacing coats to the proposed concrete basketball court. Any minor items of labor or materials not specifically noted in this Special Provision or on the plans which is necessary for the proper completion of the work described will be considered incidental and are to be included in the contract.

B. This section includes concrete basketball court surface color coating system.

Section 1.02 SUBMITTALS

A. Comply with Section 01330 (01 33 00) – Submittal Procedures.

B. Product Data: Submit manufacturer's product data, including surface and crack preparation and application instructions.

C. Samples: Submit manufacturer's color samples of color coating.

D. Test Reports:

1. Submit independent test results for solar reflectance index.
2. Submit independent test results for 2000 Hour ASTM G154, accelerated weathering UV test, to demonstrate long-term durability and fade resistance.
3. Submit independent test results for 2000 Hour, accelerated weathering ASTM G155 Xenon Arc test, to demonstrate long-term fade resistance and quality of pigment.

E. Manufacturer's Certification: Submit manufacturer's certification that materials comply with specified requirements and are suitable for intended application.

F. Manufacturer's Project References: Submit manufacturer's list of successfully completed concrete basketball & multi-purpose court surface color coating system projects, including project name, location, and date of application.

G. Applicator's Project References: Submit applicator's list of successfully completed concrete basketball & multi-purpose court surface color coating system projects, including project name, location, type and quantity of color coating system applied, and date of application.

H. Warranty Documentation: Submit manufacturer's standard warranty.

I. Authorized Installer Certificate: Submit manufacturer's authorized installer certificate.

Section 1.03 QUALITY ASSURANCE

A. Manufacturer's Qualifications:

1. Manufacturer regularly engaged, for past 5 years, in manufacture of concrete

basketball & multi-purpose court surface color coating systems of similar type to that specified.

2. United States owned company.
3. Member: American Sports Builders Association (ASBA)

B. Applicator's Qualifications:

1. Applicator regularly engaged, for past 3 years, in application of basketball & multi-purpose court surface color coating systems of similar type to that specified.
2. Employ persons trained for application of basketball & multi-purpose court surface color coating systems.
3. Applicator must be authorized installer of the surfacing brand used.

Section 1.04 DELIVERY, STORAGE, AND HANDLING

A. Delivery and Acceptance Requirements: Deliver materials to site in manufacturer's original, unopened containers and packaging, with labels clearly identifying product name and manufacturer.

B. Storage and Handling Requirements:

1. Store and handle materials in accordance with manufacturer's instructions.
2. Keep materials in manufacturer's original, unopened containers and packaging until application.
3. Store materials in clean, dry area indoors.
4. Store materials out of direct sunlight.
5. Keep materials from freezing.
6. Protect materials during storage, handling, and application to prevent contamination or damage.
7. Close containers when not in use.
8. Retain manufacturer batch codes on each container and application dates, for warranty purposes.

Section 1.05 AMBIENT CONDITIONS

A. Do not apply concrete basketball & multi-purpose court surface color coating system when air or surface temperatures are below 50°F (10°C) during application or within 24 hours after application.

B. Do not apply concrete basketball & multi-purpose court surface color coating system when rain is expected during application or within 24 hours after application.

PART 2 PRODUCTS

Section 2.01 MANUFACTURER

A. SportMaster Sport Surfaces, PO Box 2277, 2520 South Campbell Street, Sandusky, Ohio 44870. Toll Free 800-326-1994. Fax 877-825-9226. Website www.sportmaster.net. E-mail moreinfo@sportmaster.net.

All other brands must be pre-approved by the engineer/owner, 7 days prior to the bid date. If submitting another brand, bidder must furnish copies of all submittal documents under 1.4.

Section 2.02 MATERIALS

A. Concrete Basketball & Multi-Purpose Court Surface Color Coating System: SportMaster Color Coating System

B. Filler Course: SportMaster "Acrylic Resurfacer".

1. 100 percent acrylic emulsion resurfacer.
2. Mix on-site with silica sand.
3. Apply to adhesion promoter or previously colored acrylic surfaces in preparation of color coating system.
4. Chemical Characteristics, by weight, Minimum:
   a. Acrylic Emulsion: 44.0 percent.
   b. Hiding Pigment: 2.0 percent.
   c. Mineral Inert Fillers: 5.0 percent.
   d. Film Formers, Additives: 0.2 percent.
   e. Water: 45.0 percent.
5. Weight per Gallon at 77 Degrees F: 8.5 lbs., plus or minus 0.5 lbs.
6. Non-Volatile Material: 27.5 percent, plus or minus 5.0 percent.
7. Color : Black or Neutral.

C. Adhesion Promoter: SportMaster "Acrylic Adhesion Promoter".

1. Acrylic emulsion primer.
2. Primes concrete surface and promotes adhesion of color coating system materials.
3. Weight per Gallon at 77 Degrees F: 8.7 lbs., plus or minus 0.5 lbs.

D. Color Coating: SportMaster "ColorPlus System".

1. 100 percent acrylic emulsion coating.
2. Mix on-site with silica sand and water.
3. Color coats basketball and multi-purpose courts.
4. Weight per Gallon at 77 Degrees F: 9.2 lbs., plus or minus 0.5 lbs.
5. Color: Specified by Owner

PART 3 EXECUTION

Section 3.01 EXAMINATION

A. Examine concrete basketball and multi-purpose court surfaces to receive color coating system.

B. Verify:

1. Suitable vapor barrier beneath concrete slab.
2. Perimeter drainage to prevent moisture accumulation beneath concrete surface.
3. No curing compounds have been applied to surface.
4. Concrete basketball and multi-purpose courts meet ASBA requirements.

C. Notify engineer of conditions that would adversely affect application or subsequent use.

D. Do not begin surface preparation or application until unacceptable conditions are corrected.

Section 3.02 SURFACE PREPARATION

A. Protection of In-Place Conditions: Protect adjacent surfaces and landscaping from contact with concrete basketball and multi-purpose court surface color coating system.

B. Prepare surfaces in accordance with manufacturer's instructions.

C. New Concrete:

1. Cure new concrete surfaces a minimum of 28 days before application of concrete basketball and multi-purpose court surface color coating system.
2. Provide medium broom finish or similar roughened texture.
3. Do not steel trowel finish.
4. Acid etch with phosphoric or muriatic acid and rinse thoroughly prior to application of color coating system.

D. Remove dirt, dust, debris, oil, grease, sealers, curing compounds, vegetation, loose coatings, loose materials, and other surface contaminants which could adversely affect application of concrete basketball and multi-purpose court surface color coating system. Pressure wash entire surface.

E. Repair cracks, depressions, and surface defects in accordance with manufacturer's instructions before application of color coating.

F. Repair spalled areas and level depressions 1/8 inch and deeper with patch binder in accordance with manufacturer's instructions.

G. Apply adhesion promoter over entire concrete surface in accordance with manufacturer's instructions.

H. Apply 1 coat of filler coarse to provide smooth underlayment for application of color coating.

I. Ensure that surface repairs are flush and smooth to adjoining surfaces.

Section 3.03 APPLICATION

A. Apply concrete basketball and multi-purpose court surface color coating system in accordance with manufacturer's instructions at locations indicated on the Drawings.

B. Mix materials in accordance with manufacturer's instructions.

C. Apply Filler Course and color coating with a 50-60 durometer, soft rubber squeegee.

D. Filler Course:

1. Apply 1 coat on new concrete or existing acrylic surfaces with minimal repairs.

E. Apply a minimum of 2 coats of color coating to prepared surfaces in accordance with manufacturer's instructions.

F. Allow material drying times in accordance with manufacturer's instructions before applying other materials or opening completed surface to foot traffic.

Section 3.04 PROTECTION

A. Allow a minimum of 24 hours curing time before opening courts for play.

B. Protect applied concrete basketball and multi-purpose court surface color coating system to ensure that, except for normal weathering, coating system will be without damage or deterioration at time of Substantial Completion.

PART 4 METHOD OF MEASUREMENT AND BASIS OF PAYMENT

Section 4.01 METHOD OF MEASUREMENT

A. No measurement of the Basketball Court Surfacing (All Finishing Layers) package shall be taken.

Section 4.02 BASIS OF PAYMENT

A. Payment for the Basketball Court Surfacing (All Finishing Layers) shall be by Lump Sum (LS). Payment shall include all materials, equipment, supplies, to perform all necessary operations required to install all surfacing coats to the propose concrete basketball court, as well as all labor required for completion of the Basketball Court Surfacing.

B.

Pay Item	Pay Unit
Basketball Court Surfacing (All Finishing Layers)	LS

END OF SECTION 06810

SECTION 06820

BASKETBALL COURT MARKINGS

PART 1 GENERAL

Section 1.01 SUMMARY

A. This work consists of furnishing all labor, materials, equipment, supplies, to perform all necessary operations required to install all basketball court markings for the project per the Striping Layout. Any minor items of labor or materials not specifically noted in this Special Provision or on the plans which is necessary for the proper completion of the work described will be considered incidental and are to be included in the contract.

Section 1.02 SUBMITTALS

A. Comply with Section 01330 (01 33 00) – Submittal Procedures.

B. Product Data: Submit manufacturer's product data and application instructions.

C. Samples: Submit manufacturer's color samples of color coating.

D. Manufacturer's Certification: Submit manufacturer's certification that materials comply with specified requirements and are suitable for intended application.

E. Manufacturer's Project References: Submit manufacturer's list of successfully completed concrete basketball & multi-purpose court surface color coating system projects, including project name, location, and date of application.

F. Applicator's Project References: Submit applicator's list of successfully completed concrete basketball & multi-purpose court surface color coating system projects, including project name, location, type and quantity of color coating system applied, and date of application.

G. Warranty Documentation: Submit manufacturer's standard warranty.

H. Authorized Installer Certificate: Submit manufacturer's authorized installer certificate.

Section 1.03 QUALITY ASSURANCE

A. Manufacturer's Qualifications:

1. Manufacturer regularly engaged, for past 5 years, in manufacture of concrete basketball & multi-purpose court surface color coating systems of similar type to that specified.
2. United States owned company.
3. Member: American Sports Builders Association (ASBA)

B. Applicator's Qualifications:

1. Applicator regularly engaged, for past 3 years, in application of basketball & multi-purpose court surface color coating systems of similar type to that specified.
2. Employ persons trained for application of basketball & multi-purpose court surface color coating systems.

3. Applicator must be authorized installer of the surfacing brand used.

Section 1.04 AMBIENT CONDITIONS

A. Do not apply concrete basketball & multi-purpose court surface color coating system when air or surface temperature are below 50°F (10°C) during application or within 24 hours after application.

B. Do not apply concrete basketball & multi-purpose court surface color coating system when rain is expected during application or within 24 hours after application.

PART 2 PRODUCTS

Section 2.01 MANUFACTURER

A. SportMaster Sport Surfaces, PO Box 2277, 2520 South Campbell Street, Sandusky, Ohio 44870. Toll Free 800-326-1994. Fax 877-825-9226. Website www.sportmaster.net. E-mail moreinfo@sportmaster.net.

All other brands must be pre-approved by the engineer/owner, 7 days prior to the bid date. If submitting another brand, bidder must furnish copies of all submittal documents under 1.4.

Section 2.02 MATERIALS

A. Concrete Basketball & Multi-Purpose Court Surface Color Coating System: SportMaster Color Coating System.

B. Line Markings Primer: SportMaster "Stripe-Rite".

1. 100 percent acrylic emulsion primer, clear drying.
2. Primes line markings and prevents bleed-under for sharp lines.
3. Chemical Characteristics, by Weight, Nominal:
   a. Acrylic Emulsion: 38.0 percent.
   b. Hiding Pigment: 0.0 percent.
   c. Mineral Inert Filers: 7.0 percent.
   d. Film Formers, Additives: 1.5 percent.
   e. Water: 50.0 percent.
4. Weight per Gallon at 77 Degrees F: 8.9 lbs., plus or minus 0.5 lbs.
5. Non-Volatile Material: 29 percent, plus or minus 5 percent.

C. Line Paint: SportMaster "Textured Line Paint".

1. Pigmented, 100 percent acrylic emulsion line paint.
2. Line marking on concrete basketball and multi-purpose courts.
3. Chemical Characteristics, by Weight, Nominal:

a. Acrylic Emulsion: 25.89 percent.

b. Pigment: 14.90 percent.

c. Mineral Inert Fillers: 13.12 percent.

d. Additives: 4.73 percent.

e. Water: 41.36 percent.

4. Weight per Gallon at 77 Degrees F: 10.65 lbs., plus or minus 0.75 lbs.

5. Non-Volatile Material: 45.17 percent, plus or minus 5 percent.

6. Color: White

PART 3 EXECUTION

Section 3.01 EXAMINATION

A. Examine concrete basketball and multi-purpose court surfaces to receive color coating system.

B. Verify:

1. Suitable vapor barrier beneath concrete slab.

2. Perimeter drainage to prevent moisture accumulation beneath concrete surface.

3. No curing compounds have been applied to surface.

4. Concrete basketball and multi-purpose courts meet ASBA requirements.

C. Notify engineer of conditions that would adversely affect application or subsequent use.

D. Do not begin surface preparation or application until unacceptable conditions are corrected.

Section 3.02 SURFACE PREPARATION

A. Protection of In-Place Conditions: Protect adjacent surfaces and landscaping from contact with concrete basketball and multi-purpose court surface color coating system.

B. Prepare surfaces in accordance with manufacturer's instructions.

C. Remove dirt, dust, debris, oil, grease, sealers, curing compounds, vegetation, loose coatings, loose materials, and other surface contaminants which could adversely affect application of concrete basketball and multi-purpose court surface color coating system. Pressure wash entire surface.

Section 3.03 APPLICATION

A. Lay out court line markings in accordance with the layout as shown on the Striping Layout sheet.

B. Apply line markings primer, after masking tape has been laid, to seal voids between masking tape and court surface to prevent bleed-under when line paint is applied.

C. Apply a minimum of 1 coat of line paint in accordance with manufacturer's instructions.

Section 3.04 PROTECTION

A. Allow a minimum of 24 hours curing time before opening courts for play.

B. Protect applied concrete basketball and multi-purpose court surface color surface color coating system to ensure that, except for normal weathering, coating system will be without damage deterioration at time of Substantial Completion.

PART 4 METHOD OF MEASUREMENT AND BASIS OF PAYMENT

Section 4.01 METHOD OF MEASUREMENT

A. No measurement of the Basketball Court Markings package shall be taken.

Section 4.02 BASIS OF PAYMENT

A. Payment for the Basketball Court Markings shall be by Lump Sum (LS). Payment shall include all materials, equipment, supplies to perform all necessary operations required to install all markings as shown on the Striping Layout, as well as all labor required for completion of the Basketball Court Markings.

B.

Pay Item	Pay Unit
Basketball Court Markings	LS

END OF SECTION 06820

SECTION 06830

BASKETBALL HOOP ASSEMBLY

PART 1 GENERAL

Section 1.01 SUMMARY

A. This work consists of furnishing all labor, materials, equipment, supplies, and assembly required to perform all necessary operations required to install the Basketball Hoop Assembly as specified in the construction drawings. Any minor items of labor or materials not specifically noted in this Special Provision or on the plans which is necessary for the proper completion of the work described will be considered incidental and are to be included in the contract.

PART 2 PRODUCTS

Section 2.02 BASKETBALL HOOP ASSEMBLY

A. Pole shall be constructed of 4 ½" outside diameter RS40 flow coated galvanized steel tubing with 7 ga. wall thickness. Design shall be a bent gooseneck style and allow for a 48" bury into the ground and a 48" extension from the front of the pole to the face of the backboard.

B. Two 1 ⅝" diameter 13 ga. flow coated galvanized tubular braces shall support the top of the backboard and connect directly to the pole.

C. Pole shall be designed so that the rim mounts directly to the horizontal pole section through the backboard to eliminate stress on the backboard during play.

D. Pole systems without backboard support braces shall not be considered equal.

E. Poles shall carry a minimum 25-year warranty.

F. Backboard shall be constructed of formed and welded steel with a 39" x 54" fan-shaped playing surface. Skin shall be 12 ga. mild steel and support structure shall be 7 ga. and 10 ga. All skin edges shall be formed to create a 1 ½" lip to add strength.

G. The backboard shall be coated with a white polyester powder coated finish and have an official orange shooter's square and border.

H. Backboard shall accept rims with a 5" x 5" hole pattern.

I. Backboard shall carry a minimum 10-year limited warranty.

J. Rim shall consist of two ⅝" diameter AISI 1018 cold drawn carbon steel rings welded together at a minimum of six places.

K. Back and side plates shall be $^{3}/_{16}$" x 1" steel with punched net attachment slots suitable for nylon (included) or chain (optional) nets.

L. Individual or continuous wire formed netlocks are not an acceptable equal.

M. Rim shall be punched to mount on any front mount backboard, have unconditional lifetime warranty and orange powder coated finish. Mounting hardware shall be included.

N. Basketball Hoop Assembly shall be:

1. Manufacturer: Bison, Inc
2. Model: PR55
3. Or Approved Equal

PART 3 EXECUTION

Section 3.01 GENERAL

A. Basketball Hoop Assembly is to be fully assembled and installed according to manufacturer's instructions.

B. Basketball Hoop Assembly location and bury depth shall be according to construction drawings.

PART 4 METHOD OF MEASUREMENT AND BASIS OF PAYMENT

Section 4.01 METHOD OF MEASUREMENT

A. The basketball Hoop Assembly installation shall be measured by the Each (EA) for items installed.

Section 4.02 BASIS OF PAYMENT

A. Payment will be for a complete installation shall be by Each (EA). Payment shall include all materials, equipment, supplies, to perform all necessary operations required to install the Basketball Hoop Assembly as shown in the construction drawings, as well as all labor required for completion of the Basketball Hoop Assembly installation.

B.

Pay Item	Pay Unit
Basketball Hoop Assembly	EA

END OF SECTION 06830

SECTION 06840

8′ POLYVINYL COATED METAL PICNIC TABLE

PART 1 GENERAL

Section 1.01 SUMMARY

A. This work consists of furnishing all labor, materials, equipment, supplies, and assembly required to install an 8′ Polyvinyl Coated Metal Picnic Table on the concrete slab as specified in the construction drawings. Any minor items of labor or materials not specifically noted in this Special Provision or on the plans which is necessary for the proper completion of the work described will be considered incidental and are to be included in the contract.

PART 2 PRODUCTS

Section 2.01 PICNIC TABLE

A. Picnic table shall be constructed of steel and polyvinyl coated, measuring 8′ in length with perforated steel tabletop and seat.

B. Picnic table shall be:

1. Manufacturer: Premier Polysteel
2. Model: 8′ Picnic Table, Free Standing, Perforated Metal Design
3. Or Approved Equal

PART 3 EXECUTION

Section 3.01 GENERAL

A. Picnic table is to be fully assembled, in working order, and placed on concrete pad as shown on construction drawings.

PART 4 METHOD OF MEASUREMENT AND BASIS OF PAYMENT

Section 4.01 METHOD OF MEASUREMENT

A. The 8′ Polyvinyl Coated Metal Picnic Table installation will be measured by the Each (EA) for items installed.

Section 4.02 BASIS OF PAYMENT

A. Payment will be for a complete installation shall be by Each (EA). Payment shall include all materials, equipment, supplies, to perform all necessary operations required to install the 8′ Polyvinyl Coated Metal Picnic Table as shown on the construction drawings, as well as all labor required for completion of the 8′ Polyvinyl Coated Metal Picnic Table installation.

B.

Pay Item	Pay Unit
8′ Polyvinyl Coated Metal Picnic Table	EA

END OF SECTION 06840

SECTION 06850

PICKLEBALL COURT SURFACING (ALL FINISHING LAYERS)

PART 1 GENERAL

Section 1.01 SUMMARY

A. This work consists of furnishing all labor, materials, equipment, supplies, to perform all necessary operations required to install surfacing coats to the proposed concrete pickleball court. Any minor items of labor or materials not specifically noted in this Special Provision or on the plans which is necessary for the proper completion of the work described will be considered incidental and are to be included in the contract.

B. This section includes concrete pickleball court surface color coating system.

Section 1.02 SUBMITTALS

A. Comply with Section 01330 (01 33 00) – Submittal Procedures.

B. Product Data: Submit manufacturer's product data, including surface and crack preparation and application instructions.

C. Samples: Submit manufacturer's color samples of color coating.

D. Test Reports:

1. Submit independent test results for solar reflectance index.
2. Submit independent test results for 2000 Hour ASTM G154, accelerated weathering UV test, to demonstrate long-term durability and fade resistance.
3. Submit independent test results for 2000 Hour, accelerated weathering ASTM G155 Xenon Arc test, to demonstrate long-term fade resistance and quality of pigment.

E. Manufacturer's Certification: Submit manufacturer's certification that materials comply with specified requirements and are suitable for intended application.

F. Manufacturer's Project References: Submit manufacturer's list of successfully completed concrete pickleball court surface color coating system projects, including project name, location, and date of application.

G. Applicator's Project References: Submit applicator's list of successfully completed concrete pickleball court surface color coating system projects, including project name, location, type and quantity of color coating system applied, and date of application.

H. Warranty Documentation: Submit manufacturer's standard warranty.

I. Authorized Installer Certificate: Submit manufacturer's authorized installer certificate.

Section 1.03 QUALITY ASSURANCE

A. Manufacturer's Qualifications:

1. Manufacturer regularly engaged, for past 5 years, in manufacture of concrete pickleball court surface color coating systems of similar type to that specified.

2. United States owned company.
3. Member: American Sports Builders Association (ASBA)

B. Applicator's Qualifications:

1. Applicator regularly engaged, for past 3 years, in application of pickleball court surface color coating systems of similar type to that specified.
2. Employ persons trained for application of pickleball court surface color coating systems.
3. Applicator must be authorized installer of the surfacing brand used.

Section 1.04 DELIVERY, STORAGE, AND HANDLING

A. Delivery and Acceptance Requirements: Deliver materials to site in manufacturer's original, unopened containers and packaging, with labels clearly identifying product name and manufacturer.

B. Storage and Handling Requirements:

1. Store and handle materials in accordance with manufacturer's instructions.
2. Keep materials in manufacturer's original, unopened containers and packaging until application.
3. Store materials in clean, dry area indoors.
4. Store materials out of direct sunlight.
5. Keep materials from freezing.
6. Protect materials during storage, handling, and application to prevent contamination or damage.
7. Close containers when not in use.
8. Retain manufacturer batch codes on each container and application dates, for warranty purposes.

Section 1.05 AMBIENT CONDITIONS

A. Do not apply concrete pickleball court surface color coating system when air or surface temperatures are below 50°F (10°C) during application or within 24 hours after application.

B. Do not apply concrete pickleball court surface color coating system when rain is expected during application or within 24 hours after application.

PART 2 PRODUCTS

Section 2.01 MANUFACTURER

A. SportMaster Sport Surfaces, PO Box 2277, 2520 South Campbell Street, Sandusky, Ohio 44870. Toll Free 800-326-1994. Fax 877-825-9226. Website www.sportmaster.net. E-mail

moreinfo@sportmaster.net.

All other brands must be pre-approved by the engineer/owner, 7 days prior to the bid date. If submitting another brand, bidder must furnish copies of all submittal documents under 1.4.

Section 2.02 MATERIALS

A. Concrete Pickleball Court Surface Color Coating System: PickleMaster Surfacing System by SportMaster Sport Surfaces

B. Color Coating: SportMaster "PickleMaster".

1. 100% acrylic emulsion fortified with specialty aggregate for non-aggressive texture.
2. Mix on-site with ColorPlus Pigment and water.
3. Specialized coating system for pickleball court surfaces.
4. Weight per Gallon at 77 Degrees F: 12 lbs., plus or minus 0.5 lbs.
5. Color: Specified by Owner

PART 3 EXECUTION

Section 3.01 EXAMINATION

A. Examine concrete pickleball court surfaces to receive color coating system.

B. Verify:

1. Suitable vapor barrier beneath concrete slab.
2. Perimeter drainage to prevent moisture accumulation beneath concrete surface.
3. Curing compounds have not been used on concrete surface.
4. Concrete pickleball courts meet ASBA requirements.

C. Notify engineer of conditions that would adversely affect application or subsequent use.

D. Do not begin surface preparation or application until unacceptable conditions are corrected.

Section 3.02 SURFACE PREPARATION

A. Protection of In-Place Conditions: Protect adjacent surfaces and landscaping from contact with concrete pickleball court surface color coating system.

B. Prepare surfaces in accordance with manufacturer's instructions.

C. New Concrete:

1. Cure new concrete surfaces a minimum of 28 days before application of concrete pickleball court surface color coating system.
2. Provide medium broom finish or similar roughened texture.
3. Do not steel trowel finish.

4. Acid etch with phosphoric or muriatic acid and rinse thoroughly prior to application of color coating system.

D. Remove dirt, dust, debris, oil, grease, sealers, curing compounds, vegetation, loose coatings, loose materials, and other surface contaminants which could adversely affect application of concrete pickleball court surface color coating system. Pressure wash entire surface.

E. Repair cracks, depressions, and surface defects in accordance with manufacturer's instructions before application of color coating.

F. Repair spalled areas and level depressions 1/8 inch and deeper with patch binder in accordance with manufacturer's instructions.

G. Ensure that surface repairs are flush and smooth to adjoining surfaces.

Section 3.03 APPLICATION

A. Apply concrete pickleball court surface color coating system in accordance with manufacturer's instructions at locations indicated on the Drawings.

B. Mix materials in accordance with manufacturer's instructions.

C. Apply a minimum of 2 coats of color coating to prepared surfaces in accordance with manufacturer's instructions.

D. Allow material drying times in accordance with manufacturer's instructions before applying other materials or opening completed surface to foot traffic.

Section 3.04 PROTECTION

A. Allow a minimum of 24 hours curing time before opening pickleball courts for play.

B. Protect applied concrete pickleball court surface color coating system to ensure that, except for normal weathering, coating system will be without damage or deterioration at time of Substantial Completion.

PART 4 METHOD OF MEASUREMENT AND BASIS OF PAYMENT

Section 4.01 METHOD OF MEASUREMENT

A. No measurement of the Pickleball Court Surfacing (All Finishing Layers) package shall be taken.

Section 4.02 BASIS OF PAYMENT

A. Payment for the Pickleball Court Surfacing (All Finishing Layers) shall be by Lump Sum (LS). Payment shall include all materials, equipment, supplies, to perform all necessary operations required to install all surfacing coats to the propose concrete pickleball court, as well as all labor required for completion of the Pickleball Court Surfacing.

B.

Pay Item	Pay Unit
Pickleball Court Surfacing (All Finishing Layers)	LS

END OF SECTION 06850

SECTION 06860

PICKLEBALL COURT MARKINGS

PART 1 GENERAL

Section 1.01 SUMMARY

A. This work consists of furnishing all labor, materials, equipment, supplies, to perform all necessary operations required to install all pickleball court markings for the project per the Striping Layout. Any minor items of labor or materials not specifically noted in this Special Provision or on the plans which is necessary for the proper completion of the work described will be considered incidental and are to be included in the contract.

Section 1.02 SUBMITTALS

A. Comply with Section 01330 (01 33 00) – Submittal Procedures.

B. Product Data: Submit manufacturer's product data and application instructions.

C. Samples: Submit manufacturer's color samples of color coating.

D. Manufacturer's Certification: Submit manufacturer's certification that materials comply with specified requirements and are suitable for intended application.

E. Manufacturer's Project References: Submit manufacturer's list of successfully completed concrete pickleball court surface color coating system projects, including project name, location, and date of application.

F. Applicator's Project References: Submit applicator's list of successfully completed concrete pickleball court surface color coating system projects, including project name, location, type and quantity of color coating system applied, and date of application.

G. Warranty Documentation: Submit manufacturer's standard warranty.

H. Authorized Installer Certificate: Submit manufacturer's authorized installer certificate.

Section 1.03 QUALITY ASSURANCE

A. Manufacturer's Qualifications:

1. Manufacturer regularly engaged, for past 5 years, in manufacture of concrete pickleball court surface color coating systems of similar type to that specified.
2. United States owned company.
3. Member: American Sports Builders Association (ASBA)

B. Applicator's Qualifications:

1. Applicator regularly engaged, for past 3 years, in application of pickleball court surface color coating systems of similar type to that specified.
2. Employ persons trained for application of pickleball court surface color coating systems.
3. Applicator must be authorized installer of the surfacing brand used.

Section 1.04 AMBIENT CONDITIONS

A. Do not apply concrete pickleball court surface color coating system when air or surface temperature are below 50°F (10°C) during application or within 24 hours after application.

B. Do not apply concrete pickleball court surface color coating system when rain is expected during application or within 24 hours after application.

PART 2 PRODUCTS

Section 2.01 MANUFACTURER

A. SportMaster Sport Surfaces, PO Box 2277, 2520 South Campbell Street, Sandusky, Ohio 44870. Toll Free 800-326-1994. Fax 877-825-9226. Website www.sportmaster.net. E-mail moreinfo@sportmaster.net.

All other brands must be pre-approved by the engineer/owner, 7 days prior to the bid date. If submitting another brand, bidder must furnish copies of all submittal documents under 1.4.

Section 2.02 MATERIALS

A. Concrete Pickleball Court Surface Color Coating System: PickleMaster Surfacing System.

B. Line Markings Primer: SportMaster "Stripe-Rite".

1. 100 percent acrylic emulsion primer, clear drying.
2. Primes line markings and prevents bleed-under for sharp lines.
3. Chemical Characteristics, by Weight, Nominal:
   a. Acrylic Emulsion: 38.0 percent.
   b. Hiding Pigment: 0.0 percent.
   c. Mineral Inert Filers: 7.0 percent.
   d. Film Formers, Additives: 1.5 percent.
   e. Water: 50.0 percent.
4. Weight per Gallon at 77 Degrees F: 8.9 lbs., plus or minus 0.5 lbs.
5. Non-Volatile Material: 29 percent, plus or minus 5 percent.

C. Line Paint: SportMaster "White Line Paint".

1. 100% Acrylic Emulsion Paint.
2. Line marking on concrete pickleball courts.
3. Chemical Characteristics, by Weight, Nominal:
   a. Weight per Gallon at 77 Degrees F: 10.5 lbs., plus or minus 0.5 lbs.
   b. Non-Volatile Material: 49 percent, plus or minus 2 percent.

c. Color : White

PART 3 EXECUTION

Section 3.01 EXAMINATION

A. Examine pickleball court surfaces to receive color coating system.

B. Verify:

1. Suitable vapor barrier beneath concrete slab.
2. Perimeter drainage to prevent moisture accumulation beneath concrete surface.
3. No curing compounds have been applied to surface.
4. Concrete pickleball courts meet ASBA requirements.

C. Notify engineer of conditions that would adversely affect application or subsequent use.

D. Do not begin surface preparation or application until unacceptable conditions are corrected.

Section 3.02 SURFACE PREPARATION

A. Protection of In-Place Conditions: Protect adjacent surfaces and landscaping from contact with concrete pickleball court surface color coating system.

B. Prepare surfaces in accordance with manufacturer's instructions.

C. Remove dirt, dust, debris, oil, grease, sealers, curing compounds, vegetation, loose coatings, loose materials, and other surface contaminants which could adversely affect application of pickleball court surface color coating system. Pressure wash entire surface.

Section 3.03 APPLICATION

A. Lay out court line markings in accordance with the layout as shown on the Striping Layout sheet.

B. Apply line markings primer, after masking tape has been laid, to seal voids between masking tape and court surface to prevent bleed-under when line paint is applied.

C. Apply a minimum of 1 coat of line paint in accordance with manufacturer's instructions.

Section 3.04 PROTECTION

A. Allow a minimum of 24 hours curing time before opening courts for play.

B. Protect applied concrete pickleball court surface color surface color coating system to ensure that, except for normal weathering, coating system will be without damage deterioration at time of Substantial Completion.

PART 4 METHOD OF MEASUREMENT AND BASIS OF PAYMENT

Section 4.01 METHOD OF MEASUREMENT

A. No measurement of the Pickleball Court Markings package shall be taken.

Section 4.02 BASIS OF PAYMENT

A. Payment for the Pickleball Court Markings shall be by Lump Sum (LS). Payment shall include all materials, equipment, supplies to perform all necessary operations required to install all markings as shown on the Striping Layout, as well as all labor required for completion of the Pickleball Court Markings.

B.

Pay Item	Pay Unit
Pickleball Court Markings	LS

END OF SECTION 06860

SECTION 06870

PICKLEBALL NET ASSEMBLY

PART 1 GENERAL

Section 1.01 SUMMARY

A. This work consists of furnishing all labor, materials, equipment, supplies, and assembly required to perform all necessary operations required to install the Pickleball Net Assembly as specified in the construction drawings. Any minor items of labor or materials not specifically noted in this Special Provision or on the plans which is necessary for the proper completion of the work described will be considered incidental and are to be included in the contract.

PART 2 PRODUCTS

Section 2.02 PICKLEBALL NET ASSEMBLY

A. Pole shall be constructed of 2 7/8" outside diameter heavy-duty 8-guage steel.

B. Design shall be an external wind pickleball post.

C. Pole shall be designed to allow for top of net to sit 36" above court surface.

D. 24" Aluminum ground sleeves shall be used to insert the post into concrete anchor to allow for removal & replacement of posts without disturbance of concrete footing.

E. Post shall be finished with baked-on polyester powder coat to resist rust & increase durability.

F. Poles shall carry a minimum 5-year warranty.

G. Mounting hardware shall be included.

H. Pickleball net shall be installed after pole assembly installation.

I. Pickleball Pole Assembly shall be:

1. Manufacturer: Douglas
2. Model: 63079 OR 63078
3. Or Approved Equal

J. Pickleball Net shall be:

1. Manufacturer: Douglas
2. Model: JTN-30
3. Or Approved Equal

PART 3 EXECUTION

Section 3.01 GENERAL

A. Pickleball Net Assembly is to be fully assembled and installed according to manufacturer's instructions, with net fully installed and functional.

B. Pickleball Net Assembly location and bury depth shall be according to construction drawings.

PART 4 METHOD OF MEASUREMENT AND BASIS OF PAYMENT

Section 4.01 METHOD OF MEASUREMENT

A. The Pickleball Net Assembly installation shall be measured by the LS (LS) for items installed.

Section 4.02 BASIS OF PAYMENT

A. Payment will be for a complete installation shall be by Lump Sum (LS). Payment shall include all materials, equipment, supplies, to perform all necessary operations required to install the Pickleball Net Assembly fully functional as shown in the construction drawings, as well as all labor required for completion of the Pickleball Net Assembly installation.

B.

Pay Item	Pay Unit
Pickleball Net Assembly	LS

END OF SECTION 06870

SECTION 06880

10′ HEIGHT VINYL COATED CHAIN LINK FENCE

PART 1 GENERAL

Section 1.01 SUMMARY

A. This work consists of furnishing all labor, materials, equipment, supplies, and assembly required to install a complete 10′ Height Vinyl Coated Chain Link Fence around the pickleball court concrete surface as specified in the construction drawings. Any minor items of labor or materials not specifically noted in this Special Provision or on the plans which is necessary for the proper completion of the work described will be considered incidental and are to be included in the contract.

PART 2 PRODUCTS

Section 2.01 CHAIN LINK FENCE (ALL COMPONENTS)

A. Chain Link Fence shall be constructed of materials in accordance with Federal Specification RR-F-191G (1-25-74).

B. Fence Shall be table shall be:

1. Chain-Link Fence Fabric: Vinyl Coated over Galvanized Steel
2. All Fence components to be Vinyl Coated Color: Black
3. 10′ Fence Height
4. All galvanized fittings to conform to ASTM-A153

PART 3 EXECUTION

Section 3.01 GENERAL

A. Chain Link Fence is to be fully assembled & installed, in working order, and placed around concrete court as shown on construction drawings.

B. Chain Link Fence assembly & bury depth shall be according to construction drawings.

PART 4 METHOD OF MEASUREMENT AND BASIS OF PAYMENT

Section 4.01 METHOD OF MEASUREMENT

A. The 10′ Height Vinyl Coated Chain Link Fence installation will be measured by the Linear Foot (LF) for items installed.

Section 4.02 BASIS OF PAYMENT

A. Payment will be for a complete installation shall be by the Linear Foot (LF). Payment shall include all materials, equipment, supplies, to perform all necessary operations required to install the 10′ Height Vinyl Coated Chain Link Fence as shown on the construction drawings, as well as all labor required for completion of the 10′ Height Vinyl Coated Chain Link Fence installation.

B.

Pay Item	Pay Unit
10′ Height Vinyl Coated Chain Link Fence	LF

END OF SECTION 06880

SECTION 06890

4' WIDE CHAIN LINK FENCE GATE

PART 1 GENERAL

Section 1.01 SUMMARY

A. This work consists of furnishing all labor, materials, equipment, supplies, and assembly required to install a complete 4' Wide Chain Link Fence Gate in the 10'H Chain Link Fence as specified in the construction drawings. Any minor items of labor or materials not specifically noted in this Special Provision or on the plans which is necessary for the proper completion of the work described will be considered incidental and are to be included in the contract.

PART 2 PRODUCTS

Section 2.01 CHAIN LINK FENCE GATE (ALL COMPONENTS)

A. Chain Link Fence Gate shall be constructed of materials in accordance with Federal Specification RR-F-191G (1-25-74).

B. Fence Gate Shall be table shall be:

1. Chain-Link Fence Fabric: Vinyl Coated over Galvanized Steel
2. All Fence components to be Vinyl Coated Color: Black
3. 4' Gate Width
4. All galvanized fittings to conform to ASTM-A153

PART 3 EXECUTION

Section 3.01 GENERAL

A. Chain Link Fence Gate is to be fully assembled & installed, in working order, and placed in 10' Height Chain Link Fence as shown on construction drawings.

B. Chain Link Fence Gate assembly & bury depth shall be according to construction drawings.

PART 4 METHOD OF MEASUREMENT AND BASIS OF PAYMENT

Section 4.01 METHOD OF MEASUREMENT

A. The 4' Wide Chain Link Fence Gate installation will be measured by the Each (EA) for items installed.

Section 4.02 BASIS OF PAYMENT

A. Payment will be for a complete installation shall be by the Each (EA). Payment shall include all materials, equipment, supplies, to perform all necessary operations required to install the 4' Wide Chain Link Fence Gate within the 10' Height Vinyl Coated Chain Link Fence as shown on the construction drawings, as well as all labor required for completion of the 4' Wide Chain Link Fence Gate installation.

B.

Pay Item	Pay Unit
4' Wide Chain Link Fence Gate	EA

END OF SECTION 06890